MAVIC Crossmax 29

ASTM CATEGORY 3 : CROSS COUNTRY AND TRAIL RIDING
For a longer longevity of the wheel, Mavic recommends that the total weight supported by the wheels don't exceed 120kg, bike included

REFERENCES WHEELS

P86381	Crossmax 29 Pr Bst	R17941	Xmx29RrBst
P86601	Crossmax29PrBstXD	R22491	Xmx 29 Rr XD
R17341	Xmx29Rr	R22511	Xmx 29 Rr Bst XD

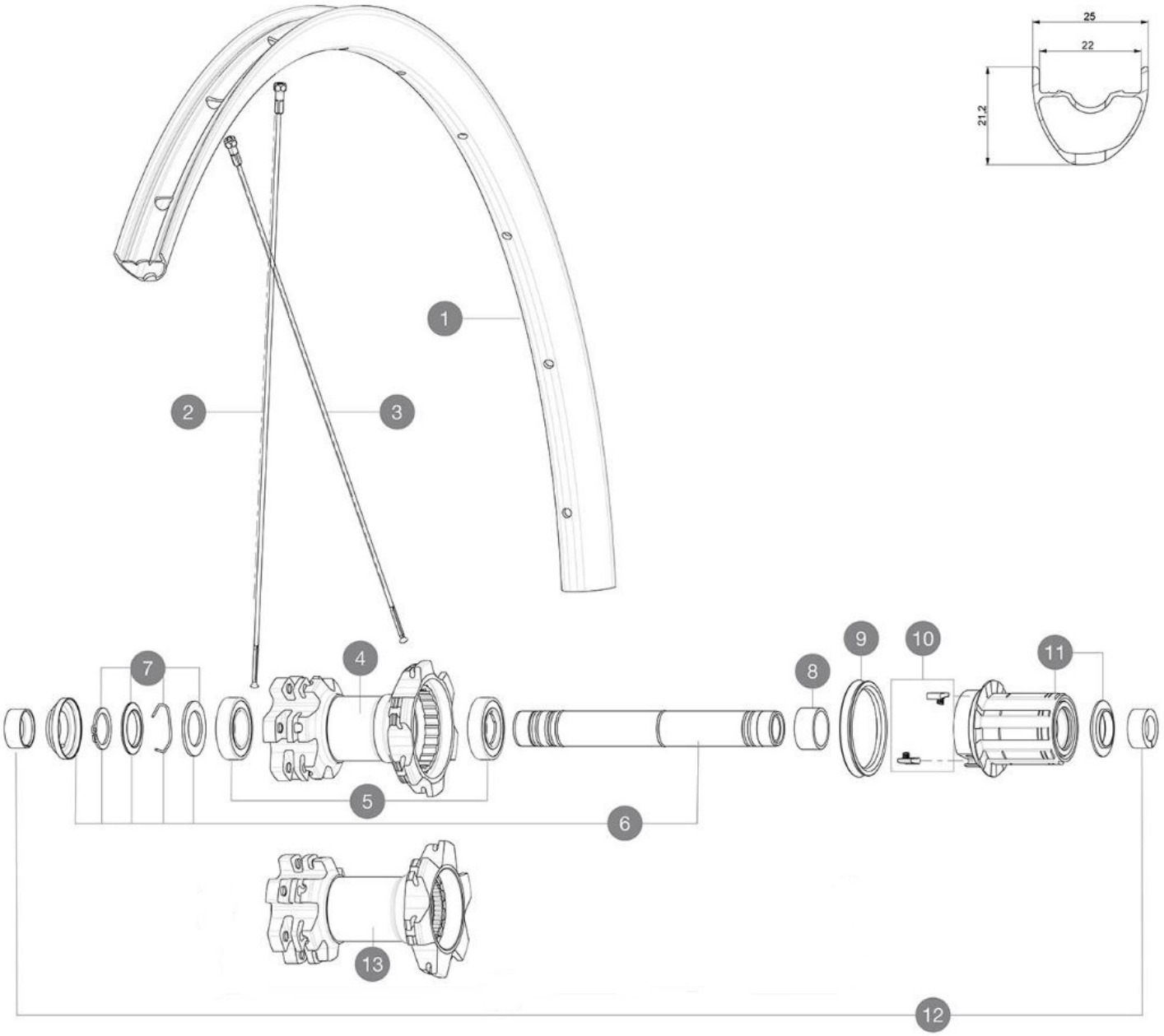

RIMS

 :

1	V2317915	KIT FRONT/REAR RIM CROSSMAX 29'' 22TSS
	V2620101	UST RIM TAPE 25mm (for 21-24mm wide rim)

SPOKES

2	36690301	"KIT 12 FT/NDS XONE/XMAX - XA 29""/AKSIUM DISC 9 + 12 FT/AKS
3	36690401	KIT 12 DS XONE/XRIDE FTSX/AKSIUM DISC 9 SPK 294mm

HUB SHELLS

4	N/A	HUB BODY
5	M40076	HUB BEARINGS 17x30x7 6903 x 2
6	V2371201	KIT REAR QRM AXLE 135-142 / BOOST 148mm
7	V2370401	KIT REAR AUTO ADJUSTING PLAY 12mm AXLE
8	35124501	SET OF 3 REAR AXLE/FREEWHEEL BODY SPACERS MTB L1
9	99610701	ITS-4 FREEWHEEL SEAL
10	99610601	PAWLS KIT FOR ITS-4 (OR TS-2)
11	35126301	TS-2 FREEWHEEL BODY + SEAL 2013 (NO PAWLS) - while stock las
13	N/A	HUB BODY

ADAPTERS

12	32965001	ADAPTER Rr 12x142mm Elite/CRide MTB (Rd)

Download date: 2024-07-16 / Update date: 2023-03-21

MAVIC Crossmax 29

DELIVERED WITH

UST valve and accessories (129 838 01)	
Tubeless rim tape	
User guide	

COMPATIBILITY

Freewheel: Shimano/Sram or XD	
Front axle: convertible from 15mm thru axle to Quick Release with optional adapters	
Rear axle: 12mm thru axle, convertible to Quick Release with optional adapters	

Specifications

RIMS

- **Material :** S6106 alloy
- **Joint :** SUP
- **Drilling :** traditional
- **Valve hole diameter :** 6.5 mm
- **Tyre :** UST Tubeless and tubetype
- **Internal width :** 22 mm
- **ETRTO size 27.5" :** 584x22TSS
- **ETRTO size 29" :** 622x22TSS

Use with Mavic Tubeless Tape

SPOKES

- **Material :** steel
- **Shape :** straight pull, round
- **Count :** 24 front and rear
- **Lacing :** front and rear crossed 2

WHEEL HUB

- **Front and rear bodies :** aluminum
- **Axle material :** aluminum
- **Front bearings :** auto adjust sealed cartridge bearings (QRM Auto), Rear bearings sealed cartridge bearings (QRM)
- **Freewheel :** TS-2 alloy

VERSIONS

- **Color :** Black only
- **Disc standard :** 6 Bolts only
- **Hub width :** Boost (front 110, rear 148) or Non-Boost (front 100, rear 135/142)

WHEEL WEIGHTS

Download date: 2024-07-16 / Update date: 2023-03-21