KSYRIUM 30 DISC

ASTMè¦□æ ¼ ã□«ã□□ã□´ã□ªã□¼ 2 : ã□-
ã□¼ã□□+ã□¸ã□£ã□³ã□□15ã□□ã□¾ã□§ã□®ã□ªã□□ã□ã□¼ã□□
ã□□ã□¤ã□¼ã□«ã□□é□·æ□□ã□¡ã□□ã□□ã□□ã□□ã□□è□ªè»¢è»□ã□□
á□«ã□□ã□□ã□¤ã□¼ã□«ã□«ã□□ã□□ã□□ç·□é□□é□□ã□□120ã□ã□-
ä»¥å□ ã□¨ã□□ã□□ã□□ã□¨ã□□æ□¨å¥¨
æ□□å¤§ã□¿ã□¤ã□¤ã□µã□¤ã□ºï¼□å¹ 62mm-
æ□□å¤§ç©ºæ°□å□§3.8Bar/55PSI

参照ホイール

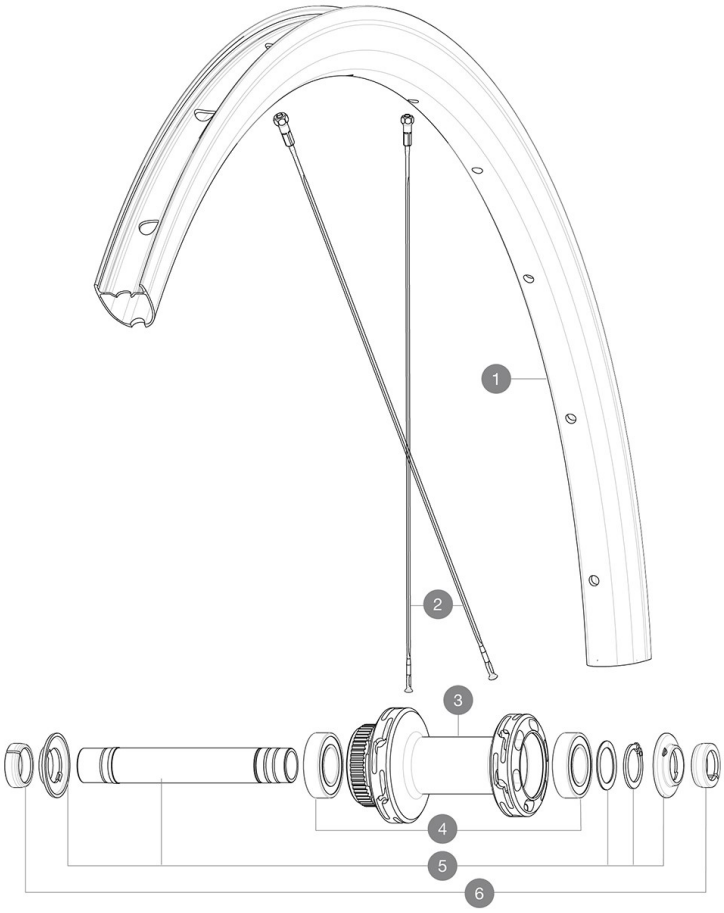

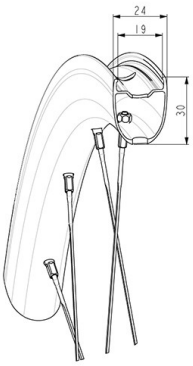

Specifications	Maxi target
Frontal run out	0,5mm
Lateral run out	0,5mm
Centrering	1,0mm (2x0,5)
Tension daN Disc side	89 > 107

RIMS

 :

1	V00104531	Kit Front/Rear rim Ksyrium 30 Disc 2024
	V3720101	25mm UST Tape for 19 to 22mm Road Rims

SPOKES

2	V00005131	Kit 12 Front/Rear Ksyrium 30 Disc butted spoke 287mm + black

HUB SHELLS

3	N/A	HUB BODY
4	M40129	KIT 2 BEARINGS 6902 15x28x7
5	V2373301	KIT QRM AUTO FRONT AXLE 12mm > 2019

OPTIONS

	V2680301	"Kit Ft Road Adapter 12 >> 9mm"

ADAPTERS

6	V2680501	12mm Road Axle Cap QRM Auto

Download date: 2024-07-16 / Update date: 2024-07-15

KSYRIUM 30 DISC

付属品

MAVICã□¿ã□¤ã□¤ã□·ã□¼ã□©ã□³ã□□ (ã□ªã□¢ã□□ã□¤ã□¼ã□«) (355 466 01)	
ã□¦ã□¼ã□¶ã□¼ã□¬ã□¤ã□□	
ã□□ã□ã□³ã□□ QR ã□¢ã□□ã□□ã□¿ã□¼	
ã□¤ã□³ã□¹ã□¿ã□³ã□□ã□□ã□©ã□¤ã□□ 360ã□«ã□ªã□¢QRã□¢ã□□ã□□ã□¿ã□¼ (B49 894 01)	
USTã□□ã□«ã□□ï¼□ã□¢ã□¯ã□»ã□µã□ªã□¼ (129 838 01)	
ã□□ã□¥ã□¼ã□□ã□¬ã□¹ã□ªã□ ã□□ã□¼ã□□æ□è¼□æ¸□ã□¿	
ã□¦ã□¼ã□¶ã□¼ã□¬ã□¤ã□□	
ã□□ã□¥ã□¼ã□□ã□¬ã□¹ã□ªã□ ã□□ã□¼ã□□æ□è¼□æ¸□ã□¿	
USTã□□ã□«ã□□ï¼□ã□¢ã□¯ã□»ã□µã□ªã□¼ (129 838 01)	
ã□□ã□ã□³ã□□ QR ã□¢ã□□ã□□ã□¿ã□¼	
ã□¤ã□³ã□¹ã□¿ã□³ã□□ã□□ã□©ã□¤ã□□ 360ã□«ã□ªã□¢QRã□¢ã□□ã□□ã□¿ã□¼ (B49 894 01)	
ã□¯ã□¤ã□□ã□¯ã□ªã□ªã□¼ã□¹ç□¨ï¼□12ã□□â□□9mm ã□ªã□¢ã□¢ã□□ã□□ã□¿ã□¼ï¼□[V2510801] - ã□□ã□¤ã□¼ã□«ã□«ä»□å±□ï¼□	

COMPATIBILITY

ã□□ã□ªã□¼ã□□ã□¤ã□¼ã□«æ□¬ä½□ï¼□ã□³ã□³ã□□ã□¼ã□□ã□□ã□«SRAM XDã□ã□¼ã□□ï¼□ã□-ã□□ã□□V2580101å□¥å£²ï¼□	
ã□□ã□ªã□¼ã□□ã□¤ã□¼ã□«æ□¬ä½□ï¼□ã□³ã□³ã□□ã□¼ã□□ã□□ã□«SRAM XDã□ã□¼ã□□ï¼□ã□-ã□□ã□□V2580101å□¥å£²ï¼□	
ã□□ã□ªã□¼ã□□ã□¤ã□¼ã□«ã□□ã□□ã□£ï¼□ã□³ã□³ã□□ã□¼ã□□ã□□ã□« SHIMANO HG ã□©ã□¤ã□□ã□ã□¼ã□□ï¼□ã□ã□□ã□□ V3850101 å□¥å£²ï¼□	
ã□□ã□ªã□¼ã□□ã□¤ã□¼ã□«ã□□ã□□ã□£ï¼□ã□³ã□³ã□□ã□¼ã□□ã□□ã□« SHIMANO HG ã□©ã□¤ã□□ã□ã□¼ã□□ï¼□ã□ã□□ã□□ V3850101 å□¥å£²ï¼□	
ã□□ã□ªã□¼ã□□ã□¤ã□¼ã□«ã□□ã□□ã□£ï¼□ã□³ã□³ã□□ã□¼ã□□ã□□ã□«SHIMANO MSï¼□å□¥å£²ã□-ã□□ã□□V3990101ï¼□	
ã□□ã□ªã□¼ã□□ã□¤ã□¼ã□«ã□□ã□□ã□£ï¼□ã□³ã□³ã□□ã□¼ã□□ã□□ã□«SHIMANO MSï¼□å□¥å£²ã□-ã□□ã□□V3990101ï¼□	
ã□□ã□ªã□¼ã□□ã□¤ã□¼ã□«ã□□ã□□ã□£ï¼□ã□³ã□³ã□□ã□¼ã□□ã□□ã□«CAMPAGNOLO EDï¼□ã□-ã□□ã□□V3440101å□¥å£²ï¼□	
ã□□ã□ªã□¼ã□□ã□¤ã□¼ã□«ã□□ã□□ã□£ï¼□ã□³ã□³ã□□ã□¼ã□□ã□□ã□«CAMPAGNOLO EDï¼□ã□-ã□□ã□□V3440101å□¥å£²ï¼□	
ã□□ã□ªã□¼ã□□ã□¤ã□¼ã□«ã□□ã□□ã□£ï¼□ã□³ã□³ã□□ã□¼ã□□ã□□ã□«CAMPAGNOLO N3Wï¼□ã□-ã□□ã□□V4270101å□¥å£²ï¼□	
ã□□ã□ªã□¼ã□□ã□¤ã□¼ã□«ã□□ã□□ã□£ï¼□ã□³ã□³ã□□ã□¼ã□□ã□□ã□«CAMPAGNOLO N3Wï¼□ã□-ã□□ã□□V4270101å□¥å£²ï¼□	
ID360 ã□·ã□□ã□□ã□□ã□¤å□¯ã□-ã□¹ã□□ã□©ã□¤ã□³ ã□¢ã□«ã□□ ã□□ã□ªã□¼ã□□ã□¤ã□¼ã□«ã□□ã□□ã□£ï¼□[V3990101]ï¼□	
ID360 ã□¹ã□©ã□ XD ã□□ã□ªã□¼ã□□ã□¤ã□¼ã□«ã□□ã□□ã□£ï¼□[V3740101]ï¼□	
ã□ªã□¢ ã□¢ã□¯ã□¹ã□«ï¼□å□ºå®□ç□¨ã□□ã□□ã□□ã□®ã□¿ï¼□å□«ã□□ï¼□ã□□M9x1ã□¹ã□¬ã□□ã□□	
FTS-L ã□·ã□□ã□□/ã□¹ã□©ã□ ã□□ã□ªã□¼ã□□ã□¤ã□¼ã□«ã□□ã□□ã□£ï¼□[30871101] - ã□□ã□¤ã□¼ã□«ã□«ä»□å±□ï¼□	
ID360 ã□¹ã□©ã□ XD ã□□ã□ªã□¼ã	

Download date: 2024-07-16 / Update date: 2024-07-15