Deemax Elite

ASTMÂ¿Â¿ Â¿Â¿Â¿Â¿ 4 : Â¿Â¿Â¿Â¿Â¿Â¿Â¿Â¿Â¿Â¿Â¿Â¿Â¿Â¿Â¿
Â¿
120Â¿Â¿Â¿Â¿Â¿Â¿Â¿Â¿Â¿Â¿Â¿
Â¿Â¿Â¿Â¿Â¿Â¿Â¿Â¿60mmÂ¿76mm (2.35"Â¿3.0")

参照ホイール

F82751	Deemax Elite 27,5 Ft Bst Black	F82741	Deemax Elite 27,5 Ft
R36511	Deemax Elite 27,5 Rr Bst MS		

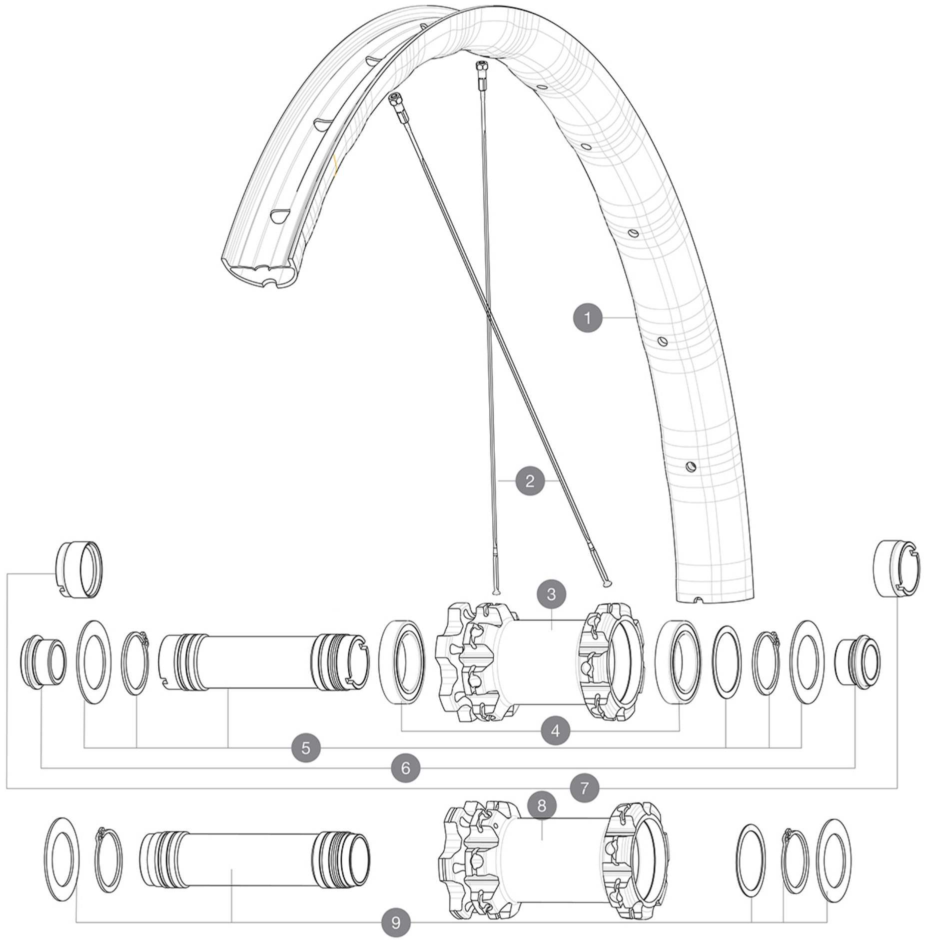

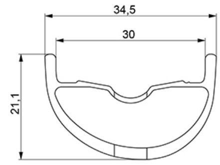

RIMS

 :

1	V3762810	KIT FRONT RIM DEEMAX ELITE 27,5"
	V3750101	35mm UST Green Tape for 30mm wide rims

SPOKES

2	V3820701	KIT 14 FRONT DEEMAX ELITE/E-XA ELITE 19 27,5" FLAT BUTTED S

HUB SHELLS

3	N/A	HUB BODY
4	M40179	FRONT BEARING 25x37x7 20mm AXLE
5	V2373801	KIT 20x110mm AXLE QRM AUTO MTB > 2019
8	N/A	HUB BODY
9	V2373701	KIT 20x110mm BOOST AXLE QRM AUTO MTB > 2019

OPTIONS

	V2650401	TORQUECAP20*31 FT QRM AUTO MTB

ADAPTERS

6	12982801	15mm ADAPTER KIT - 2012 WHEELS
7	12982901	20mm adapter for Crossmax ST/SX (front wheel)
	12982701	9mm Adapters + QR for Crossmax ST/SX (front wheel)

MAVIC Deemax Elite

付属品

USTÂ¿Â¿Â¿Â¿Â¿Â¿Â¿Â¿Â¿Â¿ (129 838 01)	
USTÂ¿Â¿Â¿Â¿Â¿Â¿Â¿Â¿Â¿Â¿ (129 838 01)	
Â¿Â¿Â¿Â¿Â¿Â¿Â¿Â¿Â¿ (308 719 01)	
Â¿Â¿Â¿Â¿Â¿Â¿Â¿Â¿Â¿ (308 719 01)	
Â¿Â¿Â¿Â¿Â¿Â¿Â¿Â¿Â¿Â¿Â¿	
Â¿Â¿Â¿Â¿Â¿Â¿Â¿Â¿Â¿Â¿Â¿	

COMPATIBILITY

Â¿Â¿Â¿Â¿Â¿Â¿Â¿Â¿Â¿Â¿/Â¿Â¿Â¿ Â¿Â¿Â¿ XD	
Â¿Â¿Â¿Â¿Â¿Â¿Â¿Â¿Â¿Â¿/Â¿Â¿Â¿ Â¿Â¿Â¿ XD	
Â¿Â¿Â¿Â¿Â¿Â¿Â¿Â¿Â¿15mmÂ¿Â¿Â¿Â ¿Â¿Â¿Â¿Â¿Â¿Â¿Â¿Â¿Â¿Â¿Â¿Â¿Â¿Â¿ Â¿20mmÂ¿Â¿Â¿Â¿Â¿Â¿Â¿Â¿Â¿Â¿Â ¿Â¿Â¿Â¿Â¿	
Â¿Â¿Â¿Â¿Â¿Â¿Â¿Â¿Â¿15mmÂ¿Â¿Â¿Â ¿Â¿Â¿Â¿Â¿Â¿Â¿Â¿Â¿Â¿Â¿Â¿Â¿Â¿Â¿ Â¿20mmÂ¿Â¿Â¿Â¿Â¿Â¿Â¿Â¿Â¿Â¿Â ¿Â¿Â¿Â¿Â¿	
Â¿Â¿Â¿Â¿Â¿Â¿Â¿12mmÂ¿Â¿Â¿Â¿Â¿Â ¿Â¿Â¿Â¿Â¿Â¿Â¿Â¿Â¿Â¿Â¿Â¿Â¿Â¿Â¿ Â¿Â¿Â¿Â¿Â¿Â¿Â¿Â¿Â¿Â¿Â¿Â¿Â¿Â¿ ¿Â¿Â¿Â¿	
Â¿Â¿Â¿Â¿Â¿Â¿Â¿12mmÂ¿Â¿Â¿Â¿Â¿Â ¿Â¿Â¿Â¿Â¿Â¿Â¿Â¿Â¿Â¿Â¿Â¿Â¿Â¿Â¿ Â¿Â¿Â¿Â¿Â¿Â¿Â¿Â¿Â¿Â¿Â¿Â¿Â¿Â¿ ¿Â¿Â¿Â¿	
Â¿Â¿Â¿Â¿Â¿Â¿Â¿Â¿Â¿Â¿ Â¿Â¿Â¿Â¿ Â¿Â¿Â¿Â¿Â¿	
Â¿Â¿Â¿Â¿Â¿Â¿Â¿Â¿Â¿Â¿ Â¿Â¿Â¿Â¿ Â¿Â¿Â¿Â¿Â¿	

Specifications

リム

•Â¿Â¿ : Â¿Â¿Â¿Â¿Â¿
•Â¿Â¿ : Â¿Â¿Â¿Â¿Â¿
•Â¿Â¿Â¿Â¿ : SUP
•Â¿Â¿Â¿Â¿ : SUP
Â¿Â¿Â¿Â¿Â¿Â¿Â¿Â¿Â¿Â¿Â¿Â¿Â¿
Â¿Â¿Â¿Â¿Â¿Â¿Â¿Â¿Â¿Â¿Â¿Â¿Â¿
Â¿Â¿Â¿Â¿ISM 4D
Â¿Â¿Â¿ISM 4D
Â¿Â¿Â¿Â¿Â¿Â¿6.5mm
Â¿Â¿Â¿Â¿Â¿Â¿6.5mm
Â¿Â¿Â¿UST
Â¿Â¿Â¿Â¿Â¿Â¿Â¿Â¿Â¿Â¿Â¿Â¿Â¿
Â¿Â¿Â¿UST
Â¿Â¿Â¿Â¿Â¿Â¿Â¿Â¿Â¿Â¿Â¿Â¿Â¿
Â¿Â¿30 mm
Â¿Â¿30 mm
Â¿Â¿Â¿Â¿Â¿ Â¿Â¿Â¿Â¿Â¿Â¿Â¿Â¿Â¿Â¿Â¿Â¿
Â¿Â¿Â¿Â¿Â¿ Â¿Â¿Â¿Â¿Â¿Â¿Â¿Â¿Â¿Â¿Â¿Â¿
ETRTO Â¿Â¿Â¿ 27.5"Â¿584x30TSS
ETRTO Â¿Â¿Â¿ 27.5"Â¿584x30TSS
ETRTO Â¿Â¿Â¿ 29"Â¿622x30TSS
ETRTO Â¿Â¿Â¿ 29"Â¿622x30TSS

スポーク

Â¿Â¿Â¿Â¿Â¿Â¿Â¿
Â¿Â¿Â¿Â¿Â¿Â¿Â¿
Â¿Â¿Â¿Â¿Â¿Â¿Â¿Â¿Â¿Â¿Â¿Â¿Â¿Â¿Â¿Â¿Â¿Â¿
Â¿Â¿Â¿Â¿Â¿Â¿Â¿
Â¿Â¿Â¿Â¿Â¿Â¿Â¿Â¿Â¿Â¿Â¿Â¿Â¿Â¿Â¿Â¿Â¿Â¿
Â¿Â¿Â¿Â¿Â¿Â¿Â¿
Â¿Â¿Â¿Â¿Â¿Â¿Â¿Â¿Â¿Â¿Â¿Â¿Â¿ 28Â¿
Â¿Â¿Â¿Â¿Â¿Â¿Â¿Â¿Â¿Â¿Â¿Â¿Â¿ 28Â¿
Â¿Â¿Â¿Â¿Â¿Â¿Â¿Â¿Â¿Â¿Â¿Â¿Â¿
3Â¿Â¿Â¿Â¿
Â¿Â¿Â¿Â¿Â¿Â¿Â¿Â¿Â¿Â¿Â¿Â¿Â¿
3Â¿Â¿Â¿Â¿

ホイールハブ

Â¿Â¿Â¿Â¿Â¿Â¿Â¿ Â¿Â¿Â¿Â¿Â¿Â¿Â¿Â¿Â¿Â¿
Â¿Â¿Â¿Â¿Â¿Â¿Â¿Â¿ Â¿Â¿Â¿Â¿Â¿Â¿Â¿Â¿Â¿Â¿
Â¿Â¿Â¿Â¿Â¿Â¿Â¿Â¿Â¿Â¿Â¿Â¿Â¿
Â¿Â¿Â¿Â¿Â¿Â¿Â¿Â¿Â¿Â¿Â¿Â¿Â¿
Â¿Â¿Â¿Â¿Â¿Â¿Â¿Â¿Â¿Â¿Â¿Â¿Â¿Â¿Â¿
Â¿Â¿Â¿QRM Â¿Â¿Â¿)Â¿Â¿Â¿Â¿Â¿Â¿Â¿Â¿
Â¿Â¿Â¿Â¿Â¿Â¿Â¿Â¿Â¿Â¿Â¿Â¿Â¿Â¿Â¿Â¿
Â¿Â¿Â¿QRM Â¿Â¿Â¿)Â¿Â¿Â¿Â¿Â¿Â¿Â¿Â¿
Â¿Â¿Â¿Â¿Â¿Â¿Â¿Â¿Â¿Â¿Â¿Â¿Â¿Â¿Â¿Â¿
Â¿360
Â¿Â¿Â¿Â¿Â¿Â¿Â¿Â¿Â¿Â¿Â¿Â¿Â¿Â¿Â¿Â¿
Â¿360

VERSIONS

Â¿Â¿Â¿Â¿Â¿Â¿Â¿Â¿Â¿Â¿
Â¿Â¿Â¿Â¿Â¿Â¿Â¿Â¿Â¿6Â¿Â¿Â¿Â¿Â¿Â¿
Â¿Â¿Â¿Â¿Â¿Â¿Â¿Â¿Â¿6Â¿Â¿Â¿Â¿Â¿Â¿
Â¿Â¿Â¿Â¿Â¿Â¿Â¿Â¿Â¿Â¿Â¿Â¿Â¿Â¿Â¿
110mmÂ¿Â¿Â¿Â¿ 148mmÂ¿Â¿Â¿Â¿Â¿Â¿Â¿Â ¿Â¿Â¿Â¿Â¿Â¿Â¿Â¿Â¿Â¿100mmÂ¿Â¿Â¿Â¿
135/142mmÂ¿
Â¿Â¿Â¿Â¿Â¿Â¿Â¿Â¿Â¿Â¿Â¿Â¿Â¿Â¿Â¿
110mmÂ¿Â¿Â¿Â¿ 148mmÂ¿Â¿Â¿Â¿Â¿Â¿Â¿Â ¿Â¿Â¿Â¿Â¿Â¿Â¿Â¿Â¿Â¿100mmÂ¿Â¿Â¿Â¿
135/142mmÂ¿
Â¿Â¿Â¿Â¿Â¿Â¿Â¿Â¿Â¿Â¿Â¿/Â¿Â¿Â¿
Â¿Â¿Â¿ XD
Â¿Â¿Â¿Â¿Â¿Â¿Â¿Â¿SRAM XDÂ¿
Â¿Â¿Â¿HGÂ¿ Â¿Â¿Â¿ Â¿Â¿Â¿Â¿
Â¿Â¿Â¿Â¿Â¿

ホイールの重み

Weight Front 27.5": 892
Weight Front 29": 938

Download date: 2024-07-16 / Update date: 2022-04-14