ALLROAD S

ASTMè¦□æ ¼ ã□«ã□□ã□´ã□ªã□¼ 2 : ã□-
ã□¼ã□□+ã□¸ã□£ã□³ã□□15ã□□ã□¾ã□§ã□®ã□ªã□□ã□ã□¼ã□□
ã□□ã□³ã□□ã□¼ã□¹ã□□ï¼□12X135mm
ã□ªã□¢ã□¢ã□¯ã□¹ã□«ã□¢ã□□ã□□ã□¿ã□¼ï¼□[V2510901]ï¼□
ã□□ã□¼ã□¹ã□□ï¼□ã□□ã□«ã□¯ã□ã□£ã□□ã□□ ([V2374401])
ã□□ã□ªã□¼ã□□ã□¤ã□¼ã□«ï¼□ã□¹ã□©ã□ ã□®XDã□□ã□·ã□□ã□□ã□®
HG9ã□¨ã□□ã□¤ã□¯ã□ ã□¹ã□□ã□©ã□¤ã□³

参照ホイール

Specifications	Maxi target
Frontal run out	0,4mm
Lateral run out	0,5mm
Centrering	1,0mm (2x0,5)
Tension daN Disc side	89 > 107

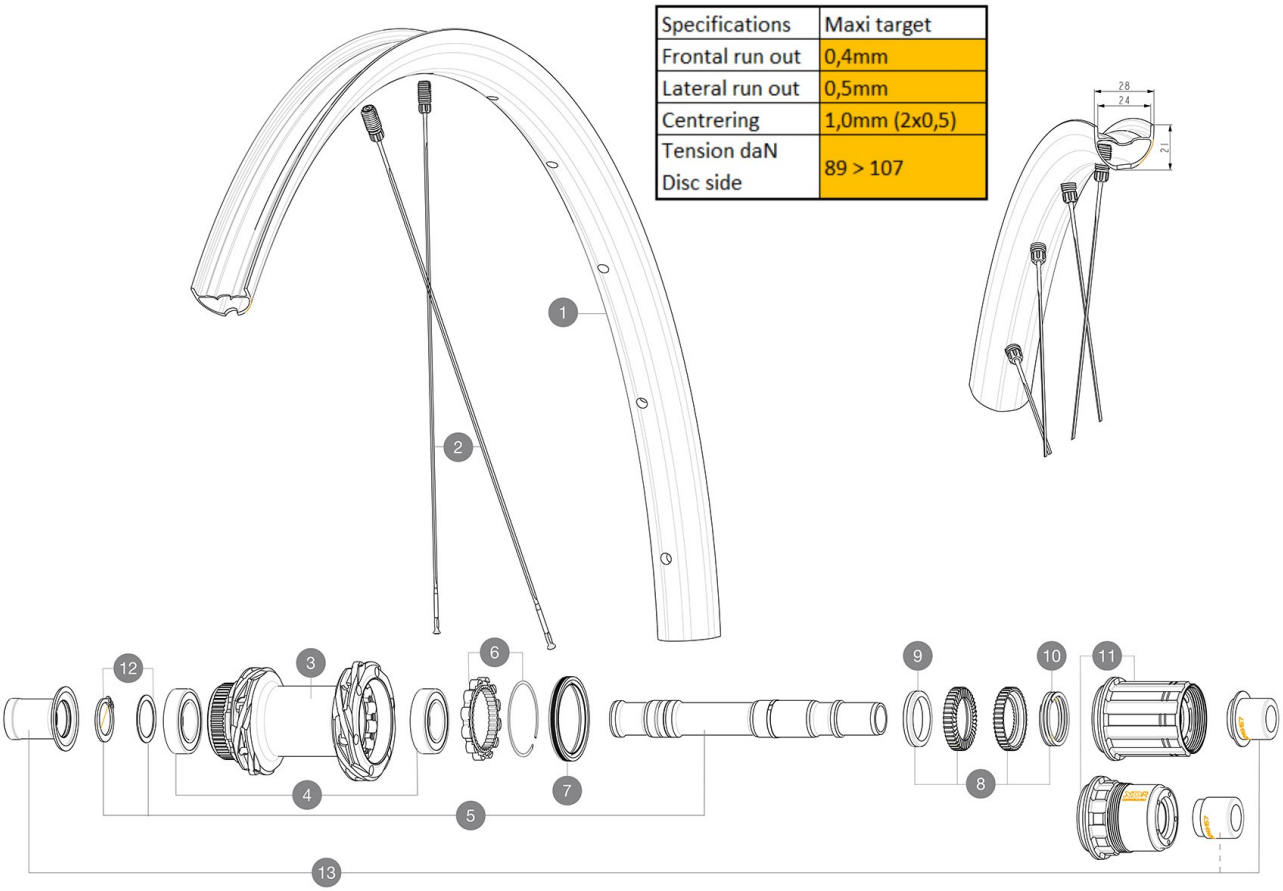

RIMS

 :

2	V00097531	Kit Front/Rear rim Allroad S 23

SPOKES

1	V00096231	Kit 14 Front/Rear steel spoke M7/7 298mm

HUB SHELLS

3	N/A	HUB BODY
4	M40076	HUB BEARINGS 17x30x7 6903 x 2
5	V00046431	KIT AXE ID360 142LIGHT CL+CIR
6	V2252701	KIT ID360 INSERT SHAPED EAR LOBE > 2017
7	V2251601	ID360 SEAL + GREASE
8	V2251701	ID360 2 RATCHETS + SPRING + GREASE
9	V2500501	Kit 3 ID360 pad for noise reduction
10	V2251801	KIT 3 ID360 ROAD SPRINGS
11	V3430101	HG11 Freewheel Body ID360
11	V2580101	FREEHUB BODY XD Road ID360
12	V2560501	KIT ADJUST. SYSTEM QRM AUTO ID360 for 17x28x7 bearing

OPTIONS

	V2510801	ID360 EVO REAR AXLE ADAPTERS 9x135mm DCL & D6T
	V2510901	ID360 EVO REAR AXLE ADAPTERS 12x135mm DCL & D6T
	V2373401	KIT ID360 135/142 DCL L1 AXLE WITH CLIP

ADAPTERS

13	V3811001	KIT ROAD ID360 RR CL ENDCAP (12MM)

Download date: 2024-07-16 / Update date: 2024-07-15

MAVIC ALLROAD S

付属品

ã□¦ã□¼ã□¶ã□¼ã□¬ã□¤ã□□	
USTã□□ã□«ã□□ï¼□ã□¢ã□¯ã□»ã□µã□ªã□¼ (129 838 01)	
å¤□æ©□è□½èª¿æ□´ã□¬ã□³ã□□ï¼□ã□ªã□¢ã□□ã□¤ã□¼ã□«ã□«ä»□å±□ï¼□ (325 423 01)	
ã□¦ã□¼ã□¶ã□¼ã□¬ã□¤ã□□	
USTã□□ã□«ã□□ï¼□ã□¢ã□¯ã□»ã□µã□ªã□¼ (129 838 01)	
å¤□æ©□è□½èª¿æ□´ã□¬ã□³ã□□ï¼□ã□ªã□¢ã□□ã□¤ã□¼ã□«ã□«ä»□å±□ï¼□ (325 423 01)	

COMPATIBILITY

ã□□ã□ªã□¼ã□□ã□¤ã□¼ã□«æ□¬ä½□ï¼□ã□³ã□³ã□□ã□¼ã□□ã□□ã□«SRAM XDã□ã□¼ã□□ï¼□ã□-ã□□ã□□V2580101å□¥å£²ï¼□	
ã□□ã□ªã□¼ã□□ã□¤ã□¼ã□«æ□¬ä½□ï¼□ã□³ã□³ã□□ã□¼ã□□ã□□ã□«SRAM XDã□ã□¼ã□□ï¼□ã□-ã□□ã□□V2580101å□¥å£²ï¼□	
ã□□ã□ªã□¼ã□□ã□¤ã□¼ã□«ã□□ã□□ã□£ï¼□ã□³ã□³ã□□ã□¼ã□□ã□□ã□« SHIMANO HG ã□©ã□¤ã□□ã□ã□¼ã□□ï¼□ã□ã□□ã□□ V3850101 å□¥å£²ï¼□	
ã□□ã□ªã□¼ã□□ã□¤ã□¼ã□«ã□□ã□□ã□£ï¼□ã□³ã□³ã□□ã□¼ã□□ã□□ã□« SHIMANO HG ã□©ã□¤ã□□ã□ã□¼ã□□ï¼□ã□ã□□ã□□ V3850101 å□¥å£²ï¼□	
ã□□ã□ªã□¼ã□□ã□¤ã□¼ã□«ã□□ã□□ã□£ï¼□ã□³ã□³ã□□ã□¼ã□□ã□□ã□«SHIMANO MSï¼□å□¥å£²ã□-ã□□ã□□V3990101ï¼□	
ã□□ã□ªã□¼ã□□ã□¤ã□¼ã□«ã□□ã□□ã□£ï¼□ã□³ã□³ã□□ã□¼ã□□ã□□ã□«SHIMANO MSï¼□å□¥å£²ã□-ã□□ã□□V3990101ï¼□	
ã□□ã□ªã□¼ã□□ã□¤ã□¼ã□«ã□□ã□□ã□£ï¼□ã□³ã□³ã□□ã□¼ã□□ã□□ã□«CAMPAGNOLO EDï¼□ã□-ã□□ã□□V3440101å□¥å£²ï¼□	
ã□□ã□ªã□¼ã□□ã□¤ã□¼ã□«ã□□ã□□ã□£ï¼□ã□³ã□³ã□□ã□¼ã□□ã□□ã□«CAMPAGNOLO EDï¼□ã□-ã□□ã□□V3440101å□¥å£²ï¼□	
ã□□ã□ªã□¼ã□□ã□¤ã□¼ã□«ã□□ã□□ã□£ï¼□ã□³ã□³ã□□ã□¼ã□□ã□□ã□«CAMPAGNOLO N3Wï¼□ã□-ã□□ã□□V4270101å□¥å£²ï¼□	
ã□□ã□ªã□¼ã□□ã□¤ã□¼ã□«ã□□ã□□ã□£ï¼□ã□³ã□³ã□□ã□¼ã□□ã□□ã□«CAMPAGNOLO N3Wï¼□ã□-ã□□ã□□V4270101å□¥å£²ï¼□	
ID360 ã□·ã□□ã□□ã□□ã□¤ã□¯ã□-ã□¹ã□□ã□©ã□¤ã□³ ã□¢ã□«ã□□ ã□□ã□ªã□¼ã□□ã□¤ã□¼ã□«ã□□ã□□ã□£ï¼□[V3990101]ï¼□	
ã□ªã□¢ ã□¢ã□¯ã□¹ã□«ï¼□å□ºå®□ç□¨ã□□ã□□ã□□ã□®ã□¿ï¼□å□«ã□□ï¼□ã□□M9x1ã□¹ã□¬ã□□ã□□	
ã□ªã□¢ã□¢ã□¯ã□¹ã□«ã□¢ã□□ã□□ã□¿ã□¼ï¼□ 12x142ã□□9x135ã□«å¤□æ□´å□¯è□½ï¼□ã□ã□□ã□□V2510801ã□¯å□¥å£²ï¼□ã□□ã□¢ã□¯ã□¹ã□«ãº¤æ□□ã□□å□¯è□½ï¼□V2373401ã□□å□¥å£²)	
ã□ªã□¢ ã□¢ã□¯ã□¹ã□«ï¼□å□ºå®□ç□¨ã□□ã□□ã□□ã□®ã□¿ï¼□å□«ã□□ï¼□ã□□M9x1ã□¹ã□¬ã□□ã□□	

Download date: 2024-07-16 / Update date: 2024-07-15