2019
REAR

E-Deemax Pro 27,5

ASTMÂ¿Â¿ Â¿Â¿Â¿Â¿Â¿ 4 : Â¿Â¿Â¿Â¿Â¿Â¿Â¿Â¿Â¿Â¿Â¿Â¿Â¿Â¿Â¿Â¿
Â¿
150Â¿Â¿Â¿Â¿Â¿Â¿Â¿Â¿Â¿Â¿Â¿Â¿
Â¿Â¿Â¿Â¿Â¿Â¿Â¿Â¿50mmÂ¿76mm (2.0"Â¿3.0")

参照ホイール

R27821	E-DeemaxPro27,5 19 Rr XD	R27811	E-Deemax Pro 27,5 19 Rr
R27841	E-Dmx Pro 27,5 19 Rr Boost XD	R27831	E-Dmx Pro 27,5 19 Rr Boost

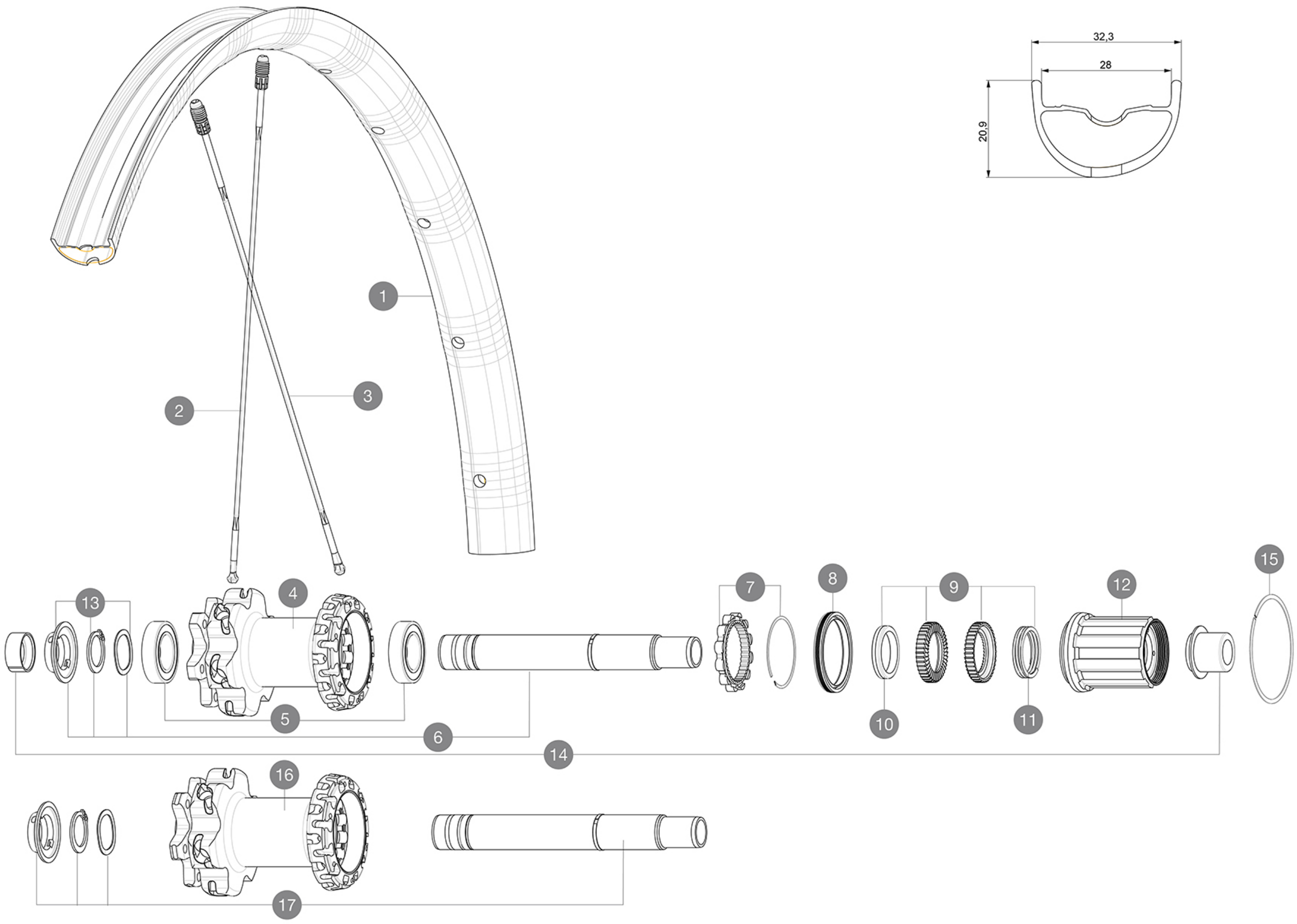

RIMS

 :

1	V3760313	KIT REAR RIM E-DEEMAX PRO 19 27,5"

SPOKES

2	V2386101	KIT 1 FRT/1 NDS STAMPED SPOKES 275mm DEEMAX PRO - while stoc
2	V2384701	KIT 12 FRONT + 1 REAR NON-DRIVE SIDE BUTTED ZICRAL SPOKES 2
3	V2386601	KIT 12 DS CROSSMAX PRO/XA PRO/E-DEEMAX PRO 19 27,5" BUTTED

HUB SHELLS

4	N/A	HUB BODY
5	M40076	HUB BEARINGS 17x30x7 6903 x 2
6	V2372101	KIT ID360 135/142 D6T AXLE WITH CLIP
7	V2252701	KIT ID360 INSERT SHAPED EAR LOBE > 2017
8	V2251601	ID360 SEAL + GREASE
9	V2375201	KIT ID360 24 TEETH 2 RATCHET + MTB SPRING + PAD (specific)
10	V2375401	KIT ID360 MTB 24T 3 NOISE REDUCING PADS
11	V2372901	KIT 3 ID360 MTB SPRINGS
12	V3790101	HG9 Steel MTB Freewheel Body ID360
13	V2373001	KIT ADJUST. SYSTEM QRM AUTO ID360 for 17x30x7 bearing
15	V2252201	KIT 2 REAR HUB RETENTION RINGS 48mm
16	N/A	HUB BODY
17	V2372201	KIT ID360 148 D6T AXLE WITH CLIP

ADAPTERS

14	V2510701	ID360 EVO REAR AXLE ADAPTERS 12x142mm DCL & D6T
	V2510801	ID360 EVO REAR AXLE ADAPTERS 9x135mm DCL & D6T

E-Deemax Pro 27,5

付属品

Â¿Â¿Â¿Â¿Â¿Â¿Â¿Â¿Â¿Â¿Â¿Â¿Â¿ (105 416 01)	
Â¿Â¿Â¿Â¿Â¿Â¿Â¿Â¿Â¿Â¿Â¿Â¿Â¿ (105 416 01)	
USTÂ¿Â¿Â¿Â¿Â¿Â¿Â¿Â¿Â¿Â¿Â¿ (129 838 01)	
USTÂ¿Â¿Â¿Â¿Â¿Â¿Â¿Â¿Â¿Â¿Â¿ (129 838 01)	
Â¿Â¿Â¿Â¿Â¿Â¿Â¿Â¿Â¿Â¿ (308 719 01)	
Â¿Â¿Â¿Â¿Â¿Â¿Â¿Â¿Â¿Â¿ (308 719 01)	
Â¿Â¿Â¿Â¿Â¿Â¿Â¿Â¿Â¿ (325 423 01)	
Â¿Â¿Â¿Â¿Â¿Â¿Â¿Â¿Â¿ (325 423 01)	
Â¿Â¿Â¿Â¿Â¿Â¿Â¿Â¿	
Â¿Â¿Â¿Â¿Â¿Â¿Â¿Â¿	

COMPATIBILITY

Â¿Â¿Â¿Â¿Â¿Â¿Â¿Â¿Â¿Â¿Â¿Â¿Â¿/Â¿Â¿Â¿Â¿Â¿ XD	
Â¿Â¿Â¿Â¿Â¿Â¿Â¿Â¿Â¿Â¿Â¿Â¿Â¿/Â¿Â¿Â¿Â¿Â¿ XD	
Â¿Â¿Â¿Â¿Â¿Â¿Â¿Â¿Â¿Â¿20mmÂ¿Â¿Â¿Â¿Â¿Â¿Â¿Â¿Â¿Â¿Â¿Â¿Â¿Â¿15mmÂ¿Â¿Â¿Â¿Â¿Â¿Â¿Â¿Â¿Â¿Â¿Â¿Â¿Â¿Â¿Â¿Â¿	
Â¿Â¿Â¿Â¿Â¿Â¿Â¿Â¿Â¿Â¿20mmÂ¿Â¿Â¿Â¿Â¿Â¿Â¿Â¿Â¿Â¿Â¿Â¿Â¿Â¿15mmÂ¿Â¿Â¿Â¿Â¿Â¿Â¿Â¿Â¿Â¿Â¿Â¿Â¿Â¿Â¿Â¿Â¿	
Â¿Â¿Â¿Â¿Â¿Â¿Â¿12mmÂ¿	
Â¿Â¿Â¿Â¿Â¿Â¿Â¿12mmÂ¿	
Â¿Â¿Â¿Â¿Â¿Â¿Â¿Â¿Â¿Â¿Â¿Â¿ Â¿Â¿Â¿Â¿ Â¿Â¿Â¿Â¿Â¿	
Â¿Â¿Â¿Â¿Â¿Â¿Â¿Â¿Â¿Â¿Â¿Â¿ Â¿Â¿Â¿Â¿ Â¿Â¿Â¿Â¿Â¿	

Specifications

リム

•Â¿Â¿ : Â¿Â¿Â¿Â¿Â¿
•Â¿Â¿ : Â¿Â¿Â¿Â¿Â¿
•Â¿Â¿Â¿Â¿Â¿ : SUP
•Â¿Â¿Â¿Â¿Â¿ : SUP
Â¿Â¿Â¿Â¿Â¿Â¿Â¿FORE
Â¿Â¿Â¿Â¿Â¿Â¿Â¿FORE
Â¿Â¿Â¿Â¿ISM 4D
Â¿Â¿Â¿Â¿ISM 4D
Â¿Â¿Â¿Â¿Â¿Â¿6.5mm
Â¿Â¿Â¿Â¿Â¿Â¿6.5mm
Â¿Â¿Â¿Â¿UST
Â¿Â¿Â¿Â¿Â¿Â¿Â¿Â¿Â¿Â¿Â¿Â¿Â¿
Â¿Â¿Â¿Â¿UST
Â¿Â¿Â¿Â¿Â¿Â¿Â¿Â¿Â¿Â¿Â¿Â¿Â¿
Â¿Â¿Â¿28mm
Â¿Â¿Â¿28mm
Â¿Â¿Â¿Â¿Â¿Â¿Â¿
Â¿Â¿Â¿Â¿Â¿Â¿Â¿
ETRTO Â¿Â¿Â¿ 27.5"Â¿584x28TSS
ETRTO Â¿Â¿Â¿ 27.5"Â¿584x28TSS

スポーク

•Â¿Â¿ : Â¿Â¿Â¿Â¿
•Â¿Â¿ : Â¿Â¿Â¿Â¿
Â¿Â¿Â¿Â¿Â¿Â¿Â¿Â¿Â¿Â¿Â¿Â¿Â¿Â¿Â¿
Â¿Â¿Â¿Â¿Â¿Â¿Â¿Â¿Â¿Â¿Â¿Â¿Â¿Â¿Â¿
Â¿Â¿Â¿Â¿Â¿Â¿Â¿Â¿Â¿Â¿Â¿Â¿Â¿Â¿
Â¿Â¿Â¿Â¿Â¿Â¿Â¿Â¿Â¿Â¿Â¿Â¿Â¿Â¿Â¿
Â¿Â¿Â¿Â¿Â¿Â¿Â¿Â¿Â¿Â¿Â¿Â¿Â¿Â¿Â¿
Â¿Â¿Â¿Â¿Â¿Â¿Â¿Â¿Â¿Â¿Â¿Â¿Â¿Â¿
Â¿Â¿Â¿Â¿Â¿FOREÂ¿Â¿Â¿Â¿Â¿Â¿Â¿Â¿Â¿
Â¿Â¿Â¿Â¿Â¿Â¿Â¿
Â¿Â¿Â¿Â¿Â¿FOREÂ¿Â¿Â¿Â¿Â¿Â¿Â¿Â¿Â¿
Â¿Â¿Â¿Â¿Â¿Â¿Â¿
Â¿Â¿Â¿Â¿Â¿Â¿Â¿Â¿Â¿Â¿Â¿Â¿ 24Â¿
Â¿Â¿Â¿Â¿Â¿Â¿Â¿Â¿Â¿Â¿Â¿Â¿ 24Â¿
Â¿Â¿Â¿Â¿Â¿Â¿Â¿Â¿Â¿Â¿
2Â¿Â¿Â¿Â¿Â¿Â¿Â¿Â¿Â¿Â¿Â¿Â¿Â¿
Â¿Â¿Â¿Â¿Â¿Â¿Â¿Â¿Â¿Â¿
2Â¿Â¿Â¿Â¿Â¿Â¿Â¿Â¿Â¿Â¿Â¿Â¿Â¿

ホイールハブ

Â¿Â¿Â¿Â¿Â¿Â¿Â¿ Â¿Â¿Â¿Â¿Â¿Â¿Â¿Â¿Â¿
Â¿Â¿Â¿Â¿Â¿Â¿Â¿ Â¿Â¿Â¿Â¿Â¿Â¿Â¿Â¿Â¿
Â¿Â¿Â¿Â¿Â¿Â¿Â¿Â¿Â¿Â¿Â¿Â¿Â¿Â¿Â¿Â¿
Â¿Â¿Â¿Â¿Â¿Â¿Â¿Â¿Â¿Â¿Â¿Â¿Â¿QRM+Â¿
Â¿Â¿Â¿Â¿Â¿Â¿Â¿Â¿Â¿Â¿Â¿Â¿Â¿Â¿Â¿Â¿
Â¿Â¿Â¿Â¿Â¿Â¿Â¿Â¿Â¿Â¿Â¿Â¿QRM
Â¿Â¿Â¿Â¿
Â¿Â¿Â¿Â¿Â¿Â¿Â¿Â¿Â¿Â¿Â¿Â¿Â¿Â¿Â¿Â¿
Â¿Â¿Â¿Â¿Â¿Â¿Â¿Â¿Â¿Â¿Â¿Â¿Â¿QRM+Â¿
Â¿Â¿Â¿Â¿Â¿Â¿Â¿Â¿Â¿Â¿Â¿Â¿Â¿Â¿Â¿Â¿
Â¿Â¿Â¿Â¿Â¿Â¿Â¿Â¿Â¿Â¿Â¿Â¿QRM
Â¿Â¿Â¿Â¿
Â¿Â¿Â¿Â¿Â¿Â¿Â¿Â¿Â¿Â¿Â¿Â¿Â¿Â¿Â¿Â¿
Â¿360 Â¿Â¿Â¿Â¿
Â¿Â¿Â¿Â¿Â¿Â¿Â¿Â¿Â¿Â¿Â¿Â¿Â¿Â¿Â¿Â¿
Â¿360 Â¿Â¿Â¿Â¿

VERSIONS

Â¿Â¿Â¿Â¿Â¿Â¿Â¿Â¿Â¿
Â¿Â¿Â¿Â¿Â¿Â¿Â¿Â¿6Â¿Â¿Â¿Â¿Â¿
Â¿Â¿Â¿Â¿Â¿Â¿Â¿Â¿6Â¿Â¿Â¿Â¿Â¿
Â¿Â¿Â¿Â¿Â¿Â¿Â¿Â¿Â¿Â¿Â¿Â¿
110mmÂ¿Â¿Â¿ 148mmÂ¿Â¿Â¿Â¿Â¿Â¿Â
¿Â¿Â¿Â¿Â¿Â¿Â¿Â¿100mmÂ¿Â¿Â¿
135/142mmÂ¿
Â¿Â¿Â¿Â¿Â¿Â¿Â¿Â¿Â¿Â¿Â¿Â¿
110mmÂ¿Â¿Â¿ 148mmÂ¿Â¿Â¿Â¿Â¿Â¿Â
¿Â¿Â¿Â¿Â¿Â¿Â¿Â¿100mmÂ¿Â¿Â¿
135/142mmÂ¿
Â¿Â¿Â¿Â¿Â¿Â¿Â¿Â¿Â¿Â¿/Â¿Â¿Â¿
Â¿Â¿Â¿ XD
Â¿Â¿Â¿Â¿Â¿Â¿Â¿Â¿Â¿Â¿/Â¿Â¿Â¿
Â¿Â¿Â¿ XD

ホイールの重み

1075

Downloaded from … Update date: 2022-04-15