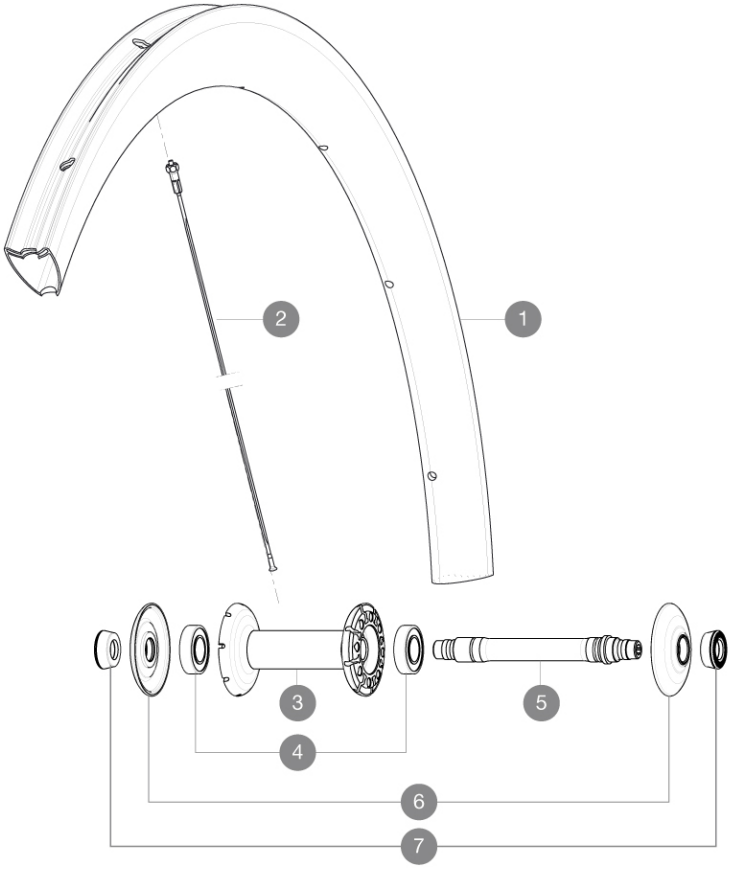
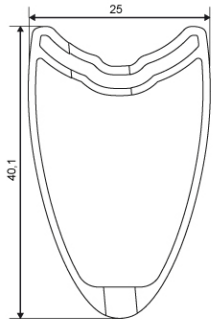
Cosmic Carbone 40 T

参照ホイール

328183	COSMIC CARBONE 40 Tub FRT WTS





RIMS



 :

1	36645510	FRONT RIM CC 40 T

SPOKES

2	36645101	10 BLK AERO SPOKES FRONT/NON DRIVE SIDE CC 40 T 272mm

HUB SHELLS

3	N/A	HUB BODY
4	M40078	FRONT HUB 6901 BEARINGS
5	30870001	FRONT AXLE ROAD RIM BRAKING QRM +
6	32985701	HUB CAP & ADJUST.NUT CXR 80

ADAPTERS

7	35117301	FRONT OR REAR FORK REST KIT R-SYS 2013

Download date: 2024-03-29 / Update date: 2022-03-01

Cosmic Carbone 40 T

付属品

BR601 Â¿Â¿Â¿Â¿Â¿Â¿Â¿Â¿Â¿Â¿Â¿Â¿Â¿	
Â¿Â¿Â¿Â¿Â¿Â¿Â¿	
Â¿Â¿Â¿Â¿Â¿Â¿Â¿Â¿Â¿Â¿Â¿Â¿	
Â¿Â¿Â¿Â¿Â¿Â¿Â¿Â¿Â¿Â¿Â¿Â¿Â¿