Crossmax Enduro 650b

RÃ©FÃ©RENCES ROUES

356087	CROSSMAX ENDURO 650bFRTWTS

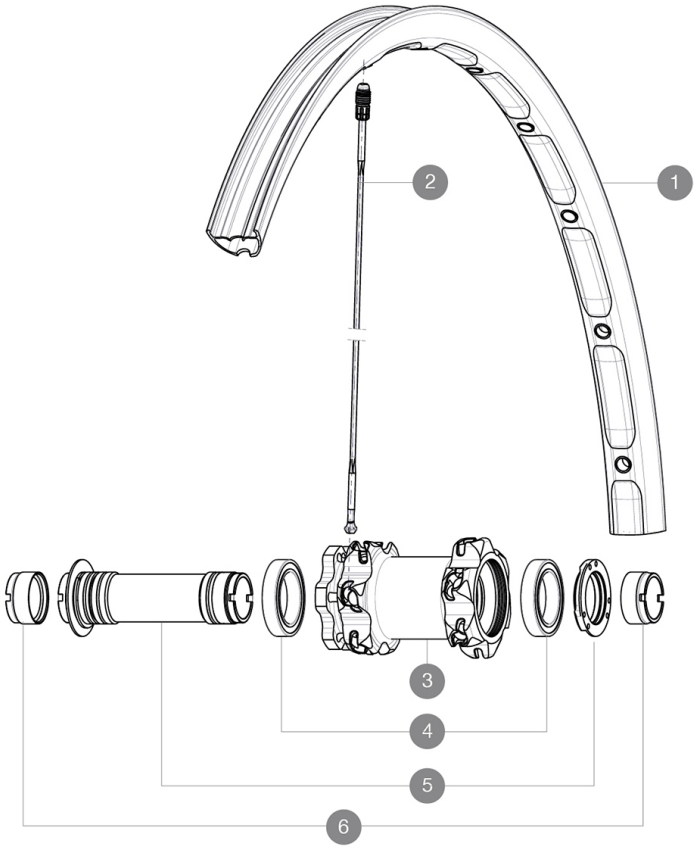

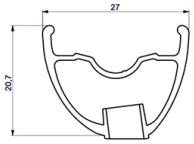

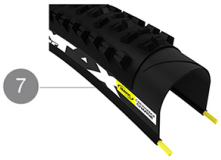

JANTES

 :

1	36692310	"FRONT CROSSMAX ENDURO 650b/27,5"" RIM"

RAYONS

2	36674901	"12 SPOKES FRONT CROSSMAX SLR/ENDURO 650b/27,5"" 274mm"

MOYEUX

4	M40179	FRONT BEARING 25x37x7 20mm AXLE
5	30870501	FRONT AXLE 20mm CROSSMAX ST/SX + DEEMAX ULTI 2012

ADAPTATEURS

6	12982901	20mm adapter for Crossmax ST/SX (front wheel)

Crossmax Enduro 650b

SpÃ©cifications

POIDS ROUES

Poids roue