Crossmax XL 29 WTS

2015
FRONT

REFERENCES WHEELS

F03001	CrossmaxXL29Ft WTS

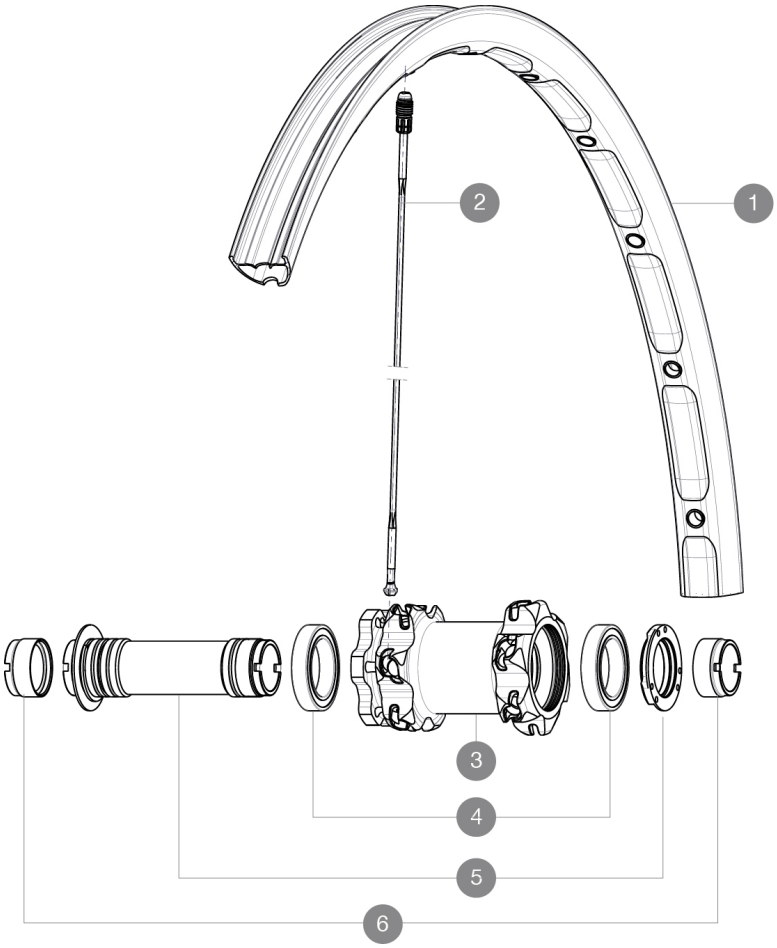

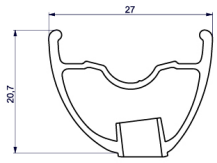

RIMS

VALVE HOLE Ã (MM): 6.5 :

1	V2310910	KIT FRONT RIM CROSSMAX XL 2015 29''

SPOKES

2	A7209901	KIT 12 FT/NDS CROSSMAX XL/DEEMAX PRO 19 29'' SPK 293mm

HUB SHELLS

3	N/A	HUB BODY
4	M40179	FRONT BEARING 25x37x7 20mm AXLE
5	30870501	FRONT AXLE 20mm CROSSMAX + DEEMAX ULTI 2012

ADAPTERS

6	12982901	ADAPTER Ft 20x110mm

Download date: 2024-03-28 / Update date: 2022-03-01

Crossmax XL 29 WTS

Specifications

RIMS

- **Internal width :** 23 mm
- **ETRTO size 29" :** 622x23C

WHEEL HUB

Shimano 11 speeds compatible
XD Compatible (XX1-X01) with optionnal kit

WHEEL WEIGHTS

Wheel weight 850

Download date: 2024-03-28 / Update date: 2022-03-01