MAVIC Crossmax SL 29 Supermax

REFERENCES WHEELS

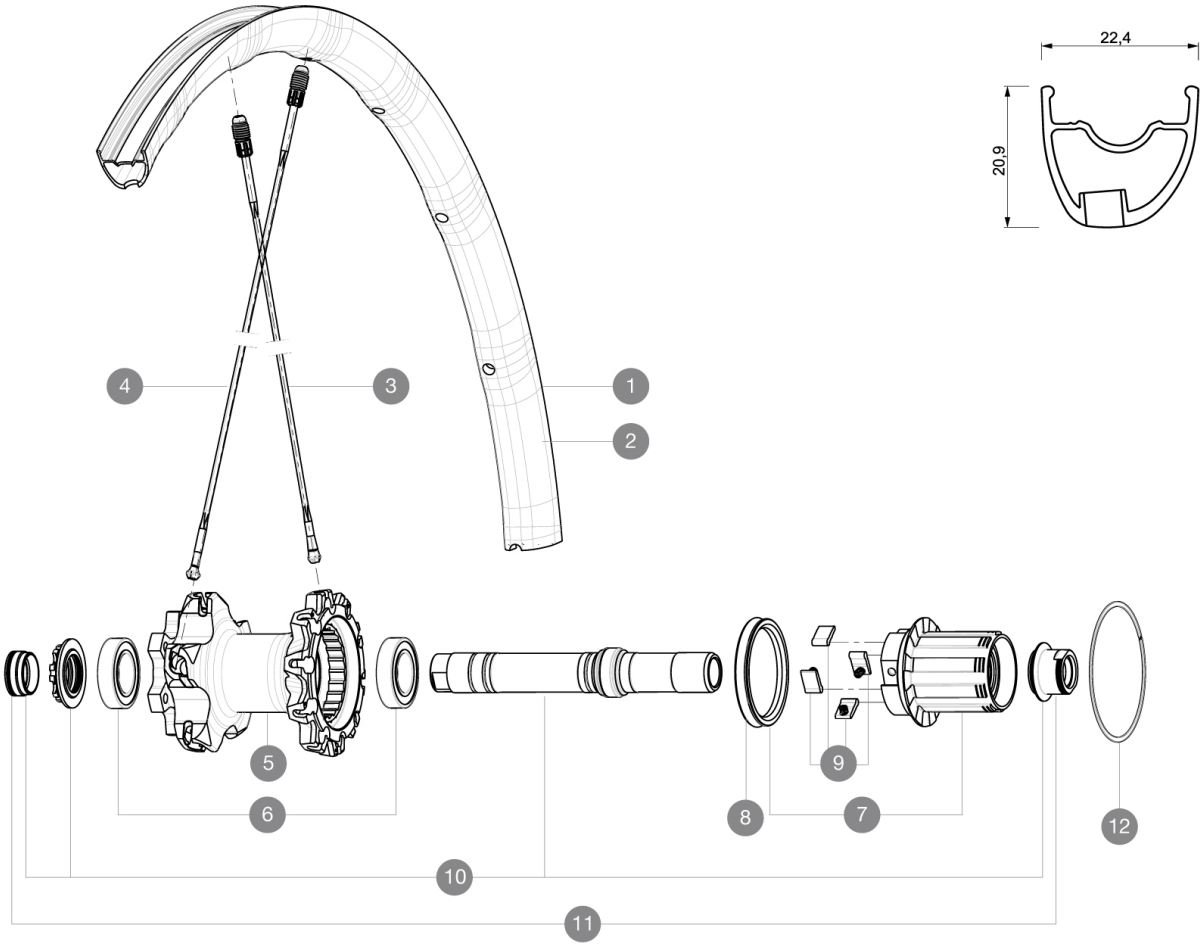

RIMS

VALVE HOLE Ã (MM): 6.5 :

1	V2310613	KIT REAR RIM CROSSMAX SL/SL PRO BLACK 29''
2	V2311913	KIT RR RIM CROSSMAX SL/SL PRO OFFSET BLK 29''

SPOKES

3	35113801	"KIT 10 DS M7/7 XMAX SLR/PRO 29"" SPK 269,5mm"
4	35113701	"KIT 10 FT/NDS M7/7 XMAX SLR 29"" SPK 299,5mm"

HUB SHELLS

5	N/A	HUB BODY
6	M40076	HUB BEARINGS 17x30x7 6903 x 2
7	35126001	ITS-4 FREEWHEEL BODY + SEAL 2013 (NO PAWLS)
8	99610701	ITS-4 FREEWHEEL SEAL
9	99610601	PAWLS KIT FOR ITS-4 (OR TS-2)
10	30870401	REAR QRM + AXLE KIT ITS4 135mm from 2012
12	30871801	ELASTIC RING 56mm diam. ITS-4 20 SPOKES

ADAPTERS

11	30872201	FRAME SUPPORT ITS-4 135mm REAR AXLE > 2012

Download date: 2024-04-26 / Update date: 2022-03-01

Crossmax SL 29 Supermax

Specifications

WHEEL WEIGHTS

Wheel weight

Download date: 2024-04-26 / Update date: 2022-03-01