Crossmax SL 27.5 Supermax

REFERENCES WHEELS

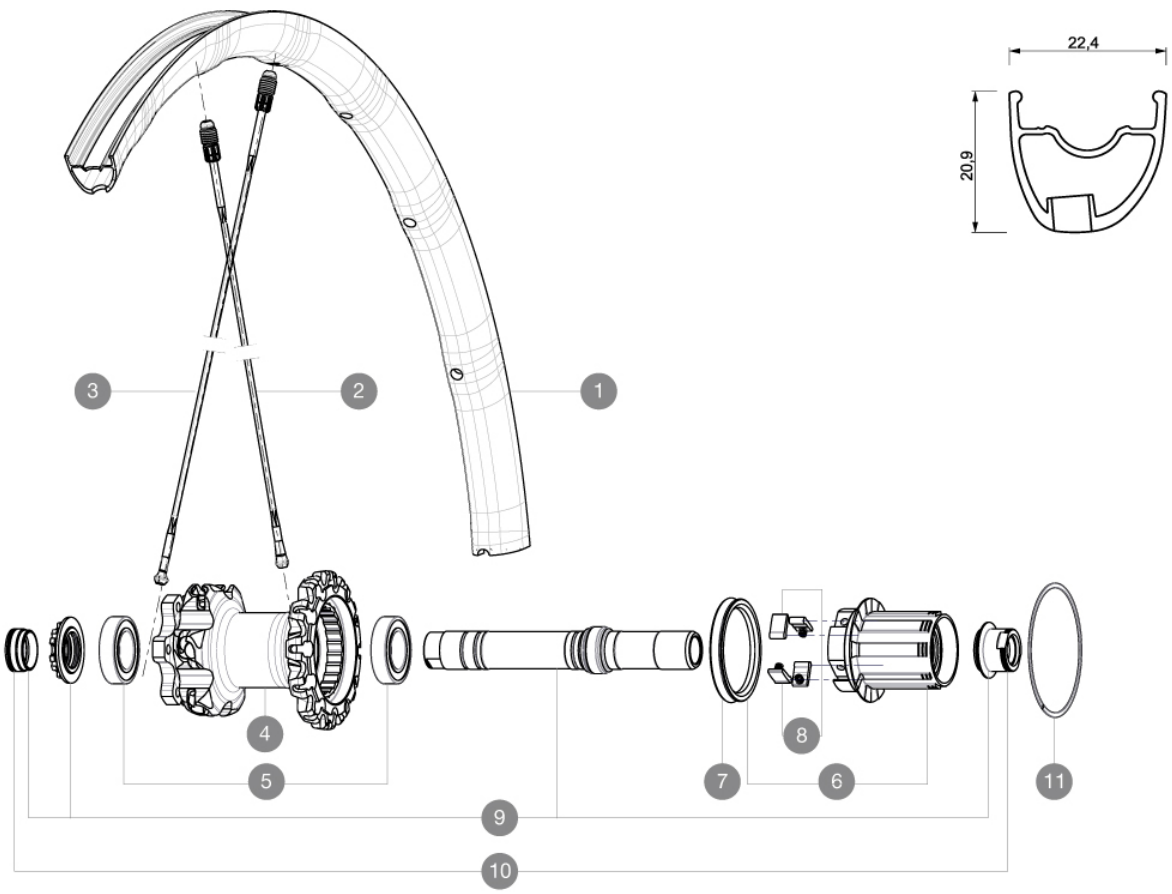

RIMS

VALVE HOLE Ã (MM): 6.5 :

1	V2310413	KIT REAR RIM CROSSMAX SL/SL PRO BLACK 26''

SPOKES

2	36675101	"KIT 10 DS XMAX SLR/END/PRO/DEEMAX PRO 27,5"" SPK 251,5mm"
3	36675001	"KIT 10 NDS XMAX SLR/ENDURO 27,5"" ALU SPK 281,5mm"

HUB SHELLS

4	N/A	HUB BODY
5	M40076	HUB BEARINGS 17x30x7 6903 x 2
6	35126001	ITS-4 FREEWHEEL BODY + SEAL 2013 (NO PAWLS)
7	99610701	ITS-4 FREEWHEEL SEAL
8	99610601	PAWLS KIT FOR ITS-4 (OR TS-2)
9	30870401	REAR QRM + AXLE KIT ITS4 135mm from 2012
11	30871801	ELASTIC RING 56mm diam. ITS-4 20 SPOKES

ADAPTERS

10	30872201	FRAME SUPPORT ITS-4 135mm REAR AXLE > 2012

Download date: 2024-03-28 / Update date: 2022-03-01

Crossmax SL 27.5 Supermax

2015
REAR

Specifications

WHEEL WEIGHTS

Wheel weight

Download date: 2024-03-28 / Update date: 2022-03-01