MAVIC Crossride Light WTS 27.5

ASTM CATEGORY 3 : offroad with jumps less than 61cm
Recommended weight limit : 120kg

REFERENCES WHEELS

R99141	XrdLight27.5Rr Boost WTS	R60901	Xride Light27.5Rr WTS

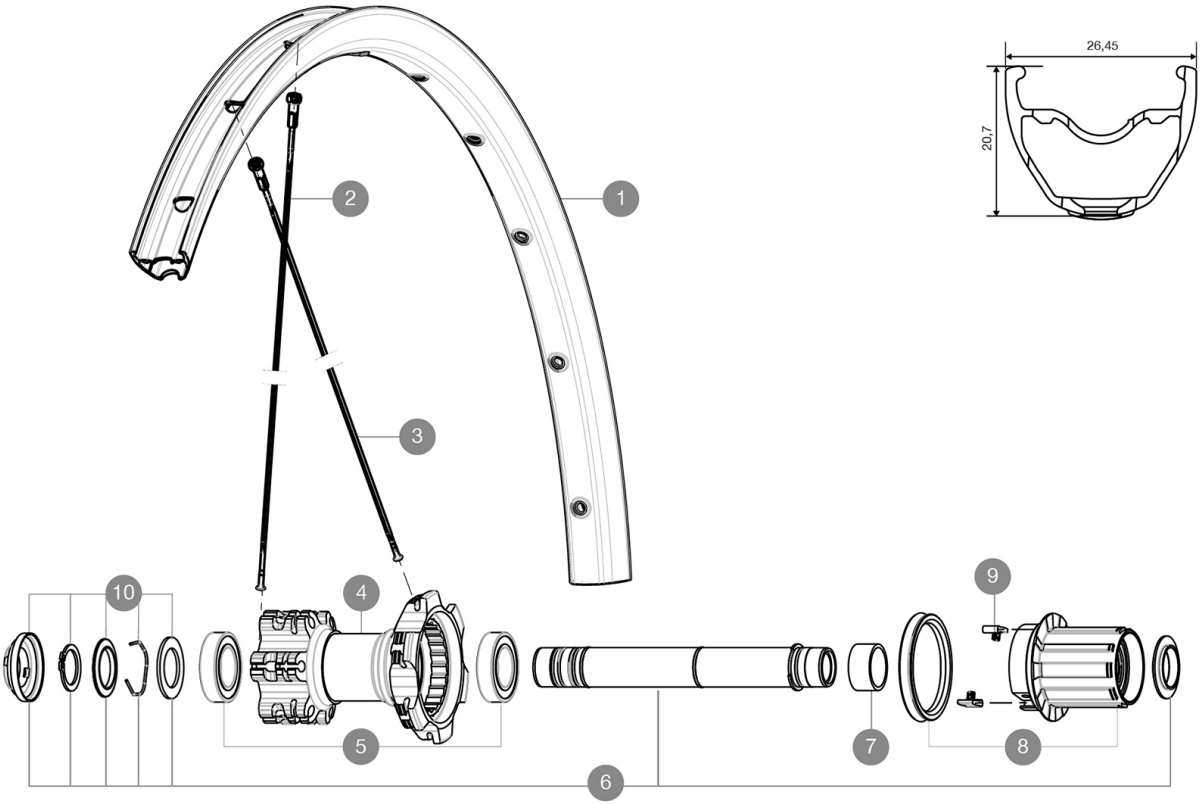

RIMS

Ã VALVE HOLE (MM): 8,5 WITH POP OFF REDUCER :

1	V2314515	"KIT FRONT/REAR RIM CROSSRIDE LIGHT 27,5""""

SPOKES

2	V2381801	KIT 12 FT/NDS XRIDE LIGHT 27,5'' SPK 277mm
3	V2382001	KIT 12 DS CROSSRIDE LIGHT 27,5'' SPOKE 275mm

HUB SHELLS

4	N/A	HUB BODY
5	M40076	HUB BEARINGS 17x30x7 6903 x 2
6	V2371201	KIT REAR QRM AXLE 135-142 / BOOST 148mm
7	35124501	SET OF 3 REAR AXLE/FREEWHEEL BODY SPACERS MTB L1
8	35126301	TS-2 FREEWHEEL BODY + SEAL 2013 (NO PAWLS) - while stock las
9	99610601	PAWLS KIT FOR ITS-4 (OR TS-2)
10	V2370401	KIT REAR AUTO ADJUSTING PLAY 12mm AXLE

Download date: 2024-03-29 / Update date: 2022-03-01

MAVIC Crossride Light WTS 27.5

DELIVERED WITH

Rim tape	
Rear 12x142mm adapters	
User guide	
Rear 12x142mm adapters for ITS4 and TS2 (308 593 01 for ITS4, 329 650 01 for TS2) 1	
Rim tape	
User guide	

COMPATIBILITY

Freewheel: Shimano/Sram, convertible to XD with optional driver body	
Front axle: convertible from 15mm thru axle to Quick Release with optional adapters	
Rear axle: 12mm thru axle, convertible to Quick Release with optional adapters	

Specifications

RIMS

- **Joint :** sleeved
- **Drilling :** traditional

Disc brake specific profile

- **Valve hole diameter :** 8,5 mm with pop off reducer
- **Tyre :** tubetype
- **Internal width :** 21 mm
- **ETRTO size 26" :** 559x21C
- **ETRTO size 27.5" :** 584x21C
- **ETRTO size 29" :** 622x21C
- **Joint :** sleeved
- **Drilling :** traditional

Disc brake specific profile

- **Valve hole diameter :** 8,5 mm with pop off reducer
- **Tyre :** tubetype
- **Internal width :** 21 mm
- **ETRTO size 26" :** 559x21C
- **ETRTO size 27.5" :** 584x21C
- **ETRTO size 29" :** 622x21C

SPOKES

- **Material :** steel
- **Shape :** straight pull, bladed, double butted
- **Nipples :** brass, ABS
- **Count :** 24 front and rear
- **Lacing :** front and rear crossed 2
- **Material :** steel
- **Shape :** straight pull, bladed, double butted
- **Nipples :** steel, ABS
- **Count :** 24 front and rear
- **Lacing :** front and rear crossed 2

WHEEL HUB

- **Freewheel :** TS-2 alloy
- **Front and rear bodies :** aluminum
- **Freewheel :** TS-2 alloy

VERSIONS

- **Color :** Black only
- **Disc standard :** 6 Bolts only
- **Hub width :** Boost (front 110, rear 148) or Non-Boost (front 100, rear 135/142)

WHEEL WEIGHTS

Wheel weight
Weight Rear 26": 970
Weight Rear 27.5": 1000
Weight Rear 29": 1050

Download date: 2024-03-29 / Update date: 2022-03-01