Crossmax SL Pro WTS 29

2016
FRONT

REFERENCES WHEELS

F27901	XmaxSLPro29FtWTS Black	F42702	XmaxSLProLtd29SpxWTS Yel
F27902	XmaxSLProLtd29FtWTS Yell	F55901	XmaxSLPro29FtNT Bk
F42701	XmaxSLPro29SpxWTSBk		

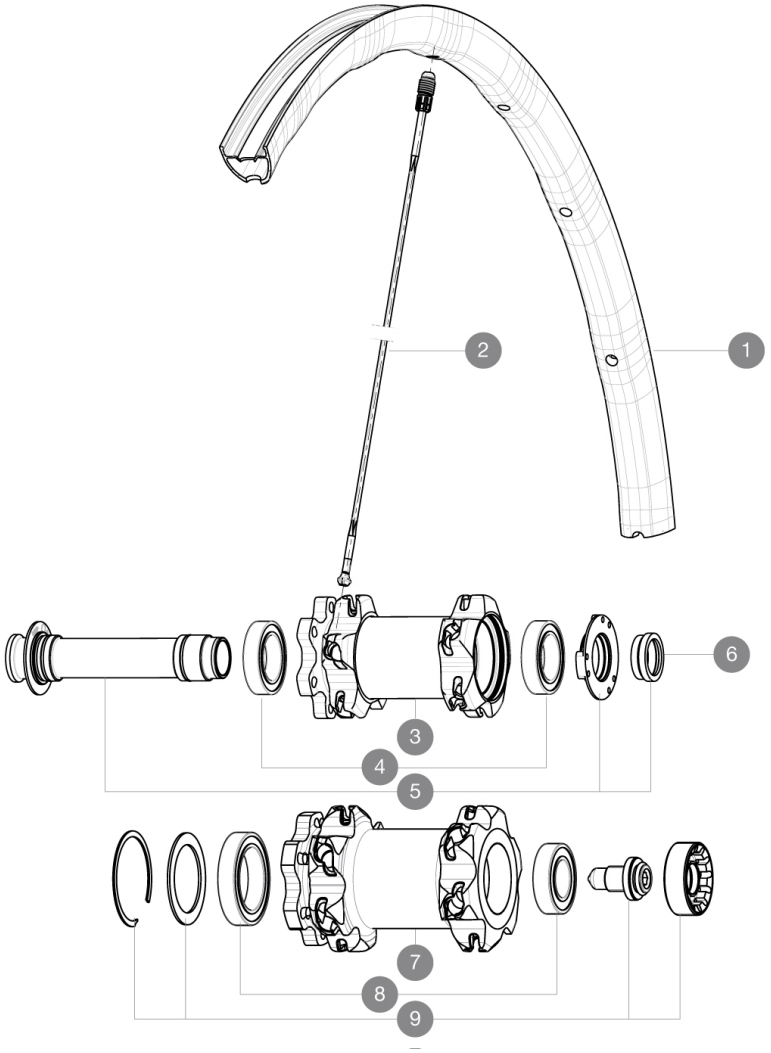

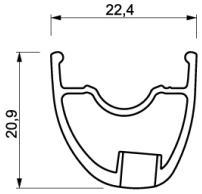

RIMS

Ã VALVE HOLE (MM): 6,5 :

1	V2313610	"KIT FRONT RIM CROSSMAX SL PRO LTD YELLOW 29"""
1	V2310310	KIT FRONT RIM CROSSMAX SL/SL PRO BLACK 29''

SPOKES

2	35113701	"KIT 10 FT/NDS M7/7 XMAX SLR 29"" SPK 299,5mm"

HUB SHELLS

3	N/A	HUB BODY
4	99688501	BEARING KIT 9/12/15 D6T HUB 20x32x7 6804
5	99688201	9/15 6B FRT AXLE CROSSMAX/KSY PRO CARBON SL C
6	10846501	FRONT FORK SUPPORT FOR 15mm AXLE
7	N/A	HUB BODY
7	N/A	HUB BODY
8	M40771	BEARING KIT FOR LEFTY 50 & 60 HUB
9	36709301	ASSEMBLY KIT FOR LEFTY SUPERMAX WHEELS

Download date: 2024-04-24 / Update date: 2022-03-01

MAVIC Crossmax SL Pro WTS 29

DELIVERED WITH

1 bottle of Mavic Sealant	
BX601 quick releases	
UST valve and accessories	
Front QR adapters	
Rear QR adapters	
Rear 12x142mm adapters	
Specific disc bolts	
Multifonction adjustment wrench	
User guide	

Specifications

RIMS

- **Material :** Maxtal
- **Joint :** SUP
- **Drilling :** Fore

Disc brake specific profile

- **Weight reduction :** ISM 4D
- **Valve hole diameter :** 6.5 mm
- **Tyre :** UST Tubeless and tubetype
- **Internal width :** 19 mm
- **ETRTO size 26" :** 559x19C
- **ETRTO size 650b/27.5" :** 584x19C
- **ETRTO size 29" :** 622x19C
- **ETRTO recommended tyre sizes :** 28mm to 62mm (1.1" to 2.5")

SPOKES

- **Material :** Zicral
- **Shape :** straight pull, bladed
- **Nipples :** Fore integrated aluminum
- **Count :** 20 front and rear
- **Lacing :** front crossed 2, rear Isopulse

WHEEL HUB

- **Front body :** carbon with aluminum flanges
- **Rear body :** aluminum
- **Axle material :** aluminum

Adjustable sealed cartridge bearings

- **Freewheel :** ITS-4 alloy

Shimano 11 speeds compatible
Sram XD Compatible (XX1-X01) with optionnal kit

WHEEL WEIGHTS

Wheel weight
Weight Front 26": 630
Weight Front 27.5": 665
Weight Front 29": 690

Download date: 2024-04-24 / Update date: 2022-03-01