2016
FRONT

MAVIC CROSSRIDE FTS-X 29

ASTM CATEGORY 3 : offroad with jumps less than 61cm
Recommended weight limit : 120kg
For a longer longevity of the wheel, Mavic recommends that the total weight supported by the wheels doesn't exceed 150kg, bike included
Maximum tyre pressure: 6.1bar/88PSI with a 25mm tyre - 3.5bar/51PSI with a 64mm tyre
Recommended tire sizes: 28 to 64 mm (1.1" to 2.5")
ETRTO recommended tyre sizes: 35mm to 69mm (1.4" to 2.7")

REFERENCES WHEELS

F50701	XRIDE FTS-X INT 29

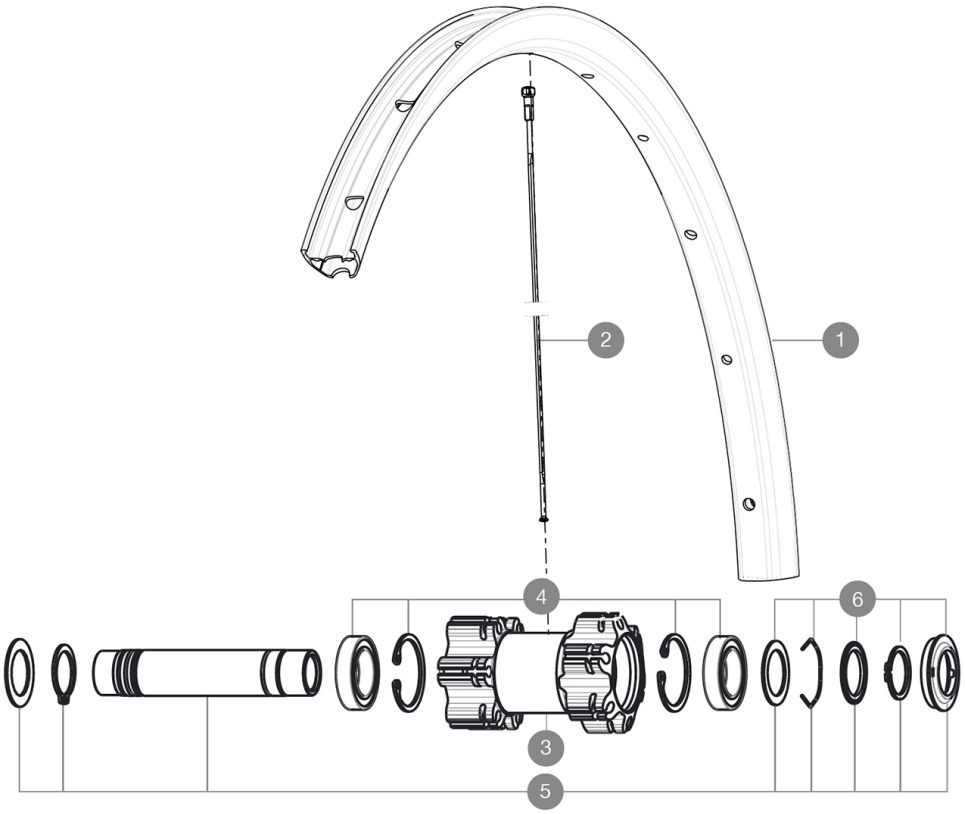

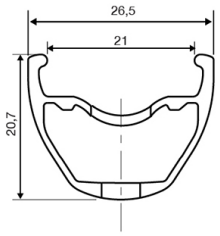

RIMS

VALVE HOLE (MM): 8,5 WITH POP OFF REDUCER :

1	V2314915	"KIT FRT/RR RIM CROSSRIDE/CROSSRIDE FTSX 29"""

SPOKES

2	V2383001	KIT 12 FT/NDS CROSSRIDE FTSX 29'' SPK 297mm

HUB SHELLS

3	N/A	HUB BODY
4	99688501	BEARING KIT 9/12/15 D6T HUB 20x32x7 6804
5	V2370101	KIT FRONT AXLE 15MM CROSSONE/-RIDE/-ROC - while stock last
5	V2371101	KIT FRONT QRM AXLE 100mm/BOOST 110mm
6	V2370301	KIT FRONT AUTO ADJUSTING PLAY 15mm AXLE

Download date: 2024-05-04 / Update date: 2024-04-10

MAVIC CROSSRIDE FTS-X 29

DELIVERED WITH

BR101 quick releases	
Rim tape	
Front QR adapters	
BR101 quick releases	
BR101 quick releases	
BR101 quick releases	
BR101 quick releases	
BR101 quick releases	
BR101 quick releases	
BR101 quick releases	
Valve reducer	
Front QR adapters	
Front QR adapters	
Front QR adapters	
Front QR adapters	
Front QR adapters	
User guide	
Front QR adapters	

COMPATIBILITY

Freewheel: Shimano/Sram	
Freewheel: Shimano/Sram	
Freewheel: Shimano/Sram	
Freewheel: Shimano/Sram	
Front axle: convertible from 15mm thru axle to Quick Release with included adapters	
Front axle: convertible from 15mm thru axle to Quick Release with included adapters	
Front axle: convertible from 15mm thru axle to Quick Release with included adapters	
Front axle: convertible from 15mm thru axle to Quick Release with included adapters	
Front axle: convertible from 15mm thru axle to Quick Release with included adapters	
Front axle: convertible from 15mm thru axle to Quick Release with included adapters	
Rear axle: 12mm thru axle, convertible to Quick Release with adapters (delivered with non-boost wheel)	
ID360 Shimano steel freewheel body ([V3790101])	
Rear axle: 12x148 Boost thru axle	
ID360 N3W freewheel body ([V4270101])	

Download date: 2024-05-04 / Update date: 2024-04-10