Crossmax Pro Carbon 29

ASTM CATEGORY 3 : CROSS COUNTRY AND TRAIL RIDING
For a longer longevity of the wheel, Mavic recommends that the total weight supported by the wheels don't exceed 120kg, bike included
Recommended tyre sizes: 46mm to 64mm (1.8" to 2.5")
Recommended tyre sizes: 46mm to 64mm (1.8" to 2.5") front and 36 mm to 64 mm (1.4" to 2.5") rear

REFERENCES WHEELS

F81101	XmaxProCarb 29 19 Ft	P87211	XmxProCarb29 19Pr BstXD
F81111	XmaxProCarb 29 19 Ft Boost		

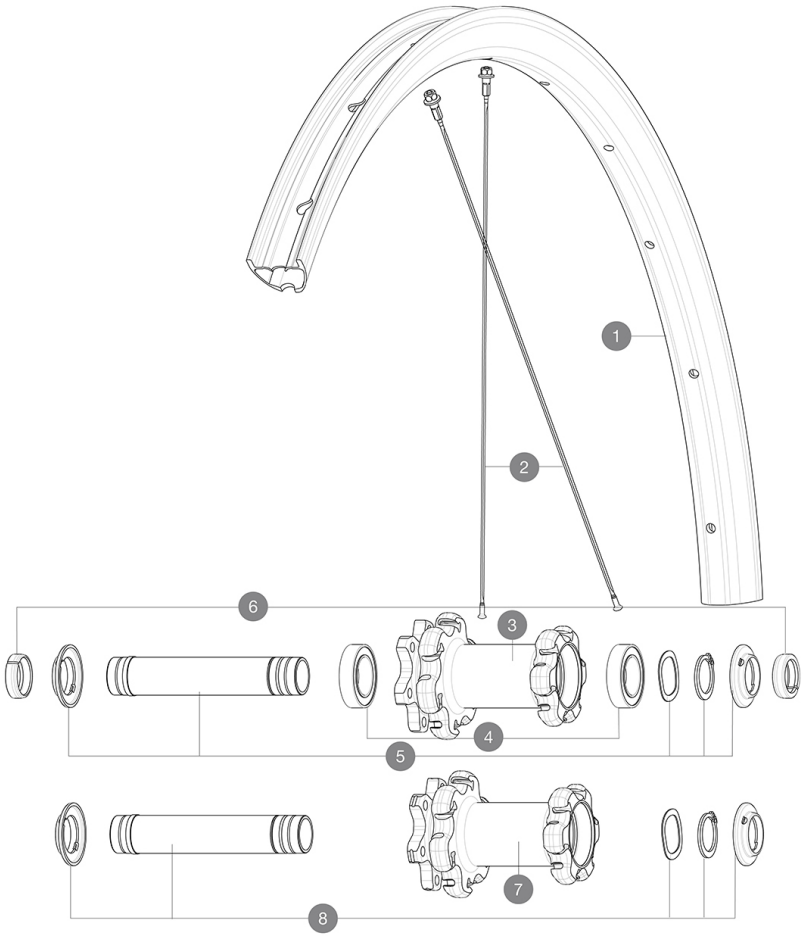

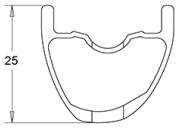

RIMS

 :

1	V3764010	KIT FRONT RIM CROSSMAX PRO CARBON 29'' 19
	V2700101	UST Tape 28mm for 25 to 27mm wide rims

SPOKES

2	V3821801	KIT 12 FRT/REAR CROSSMAX PRO CARBON 29'' EXTRA FLAT SPOKE 29

HUB SHELLS

3	N/A	HUB BODY
4	V2500901	KIT BEARINGS 18x30x7 + WAVED WASHER + CLIP
5	V2372301	KIT 100mm AXLE QRM AUTO MTB > 2019
7	N/A	HUB BODY
8	V2372401	KIT 110mm AXLE QRM AUTO MTB > 2019

OPTIONS

	V2374401	TORQUE CAPS 15*31 Adapter MTB QRM Auto > 2019 Frt HUB

ADAPTERS

6	V2372501	15mm MTB Axle Cap QRM Auto From 2019
	99694101	ADAPTER Ft 15 to 9mm QR

Download date: 2024-03-29 / Update date: 2022-04-14

MAVIC Crossmax Pro Carbon 29

DELIVERED WITH

Front QR adapters (non-boost wheel)	
Front QR adapters (non-boost wheel)	
Rear QR adapters (non-boost wheel)	
Rear QR adapters (non-boost wheel)	
UST valve and accessories (129 838 01)	
UST valve and accessories (129 838 01)	
Tubeless rim tape	
Tubeless rim tape	
Multifonction adjustment wrench (325 423 01)	
User guide	
User guide	

COMPATIBILITY

Freewheel: Shimano/Sram or XD	
Freewheel: Shimano/Sram or XD	
Front axle: convertible from 15mm thru axle to Quick Release with adapters (delivered with non-boost wheel)	
Front axle: convertible from 15mm thru axle to Quick Release with adapters (delivered with non-boost wheel)	
Rear axle: 12mm thru axle, convertible to Quick Release with adapters (delivered with non-boost wheel)	
Rear axle: 12mm thru axle, convertible to Quick Release with adapters (delivered with non-boost wheel)	
Freewheel: Shimano Micro Spline	
Freewheel: Shimano Micro Spline	

Specifications

RIMS

- **Material :** 100% Unidirectional carbon fiber
- **Material :** 100% carbon fiber
- **Drilling :** traditional
- **Drilling :** traditional
- **Valve hole diameter :** 6.5 mm
- **Valve hole diameter :** 6.5 mm
- **Tyre :** UST Tubeless and tubetype
- **Tyre :** UST Tubeless and tubetype
- **Internal width :** 23 mm
- **Internal width :** 23 mm
- **ETRTO size 27.5" :** 584x23TSS
- **ETRTO size 29" :** 622x23TSS
- **ETRTO size 29" :** 622x23TSS

Hookless profile
Hookless profile
Use with Mavic Tubeless Tape
Use with Mavic Tubeless Tape

SPOKES

- **Material :** steel
- **Material :** steel
- **Shape :** straight pull, flat, double butted
- **Shape :** straight pull, flat, double butted
- **Count :** 24 front and rear
- **Count :** 24 front and rear
- **Lacing :** front and rear crossed 2
- **Lacing :** front and rear crossed 2

WHEEL HUB

- **Front and rear bodies :** aluminum
- **Front and rear bodies :** aluminum
- **Axle material :** aluminum
- **Axle material :** aluminum

Auto adjust sealed cartridge bearings (QRM Auto), front and rear
Auto adjust sealed cartridge bearings (QRM Auto), front and rear

- **Freewheel :** Instant Drive 360
- **Freewheel :** Instant Drive 360

VERSIONS

- **Color :** Black only
- **Disc standard :** 6 Bolts only
- **Disc standard :** 6 Bolts only
- **Hub width :** Boost (front 110, rear 148) or Non-Boost (front 100, rear 135/142)
- **Hub width :** Boost (front 110, rear 148) or Non-Boost (front 100, rear 135/142)
- **Freewheel :** Shimano/Sram or XD
- **Freewheel :** Shimano/Sram or XD

WHEEL WEIGHTS

700

Download date: 2024-03-29 / Update date: 2022-04-14