2019
FRONT

MAVIC CROSSMAX

ASTMÂ¿Â¿ Â¿Â¿Â¿Â¿Â¿ 3 : Â¿Â¿Â¿Â¿Â¿Â¿Â¿Â¿Â¿Â¿Â¿Â¿Â¿Â¿Â¿Â¿Â¿Â¿
Â¿
120Â¿Â¿Â¿Â¿Â¿Â¿Â¿Â¿Â¿Â¿Â¿Â¿
Â¿Â¿Â¿Â¿Â¿Â¿Â¿Â¿Â¿46mmÂ¿64mm (1.8"Â¿2.5")

参照ホイール

F81821	Crossmax 29 Ft	F81831	Crossmax 29 Ft Boost

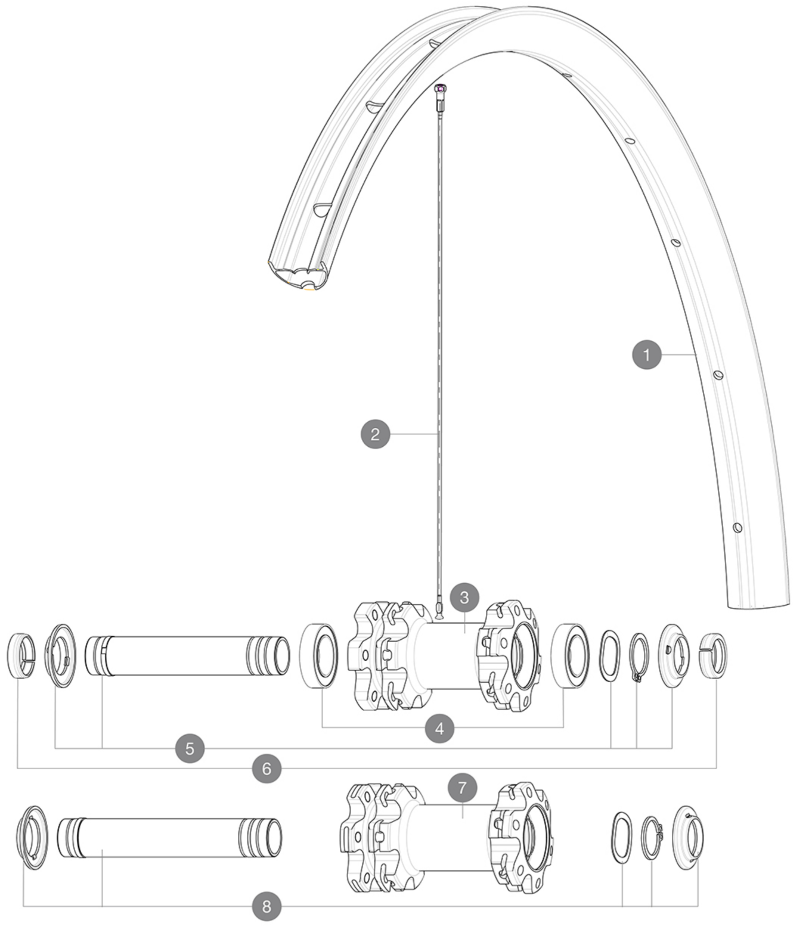

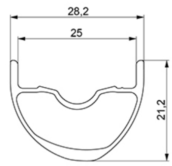

RIMS

 :

1	V3762615	KIT FRT/REAR RIM CROSSMAX 19 29"
	V2700101	UST Tape 28mm for 25 to 27mm wide rims

SPOKES

2	36690301	"12 SPOKES FRONT/OPP DRIVE SIDE CROSSONE 29"" 296mm"

HUB SHELLS

3	N/A	HUB BODY
4	V2500901	KIT BEARINGS 18x30x7 + WAVED WASHER + CLIP
5	V2372301	KIT 100mm AXLE QRM AUTO MTB > 2019
7	N/A	HUB BODY
8	V2372401	KIT 110mm AXLE QRM AUTO MTB > 2019

OPTIONS

	V2374401	TORQUE CAPS 15*31 Adapter MTB QRM Auto > 2019 Frt HUB

ADAPTERS

6	V2372501	15mm MTB Axle Cap QRM Auto From 2019
	99694101	2 REDUCERS 15/9mm

Download date: 2022-07-07 / Update date: 2022-06-21

CROSSMAX

付属品

Â¿Â¿Â¿Â¿QRÂ¿Â¿Â¿Â¿Â¿Â¿Â¿Â¿Â¿Â¿Â¿Â¿Â¿Â¿Â¿Â¿)	
Â¿Â¿Â¿Â¿QRÂ¿Â¿Â¿Â¿Â¿Â¿Â¿Â¿Â¿Â¿Â¿Â¿Â¿Â¿Â¿Â¿)	
Â¿Â¿Â¿Â¿QRÂ¿Â¿Â¿Â¿Â¿Â¿Â¿Â¿Â¿Â¿Â¿Â¿Â¿Â¿Â¿Â¿)	
Â¿Â¿QRÂ¿Â¿Â¿Â¿Â¿Â¿Â¿Â¿Â¿Â¿Â¿Â¿Â¿Â¿Â¿Â¿)	
Â¿Â¿QRÂ¿Â¿Â¿Â¿Â¿Â¿Â¿Â¿Â¿Â¿Â¿Â¿Â¿Â¿Â¿Â¿)	
Â¿Â¿QRÂ¿Â¿Â¿Â¿Â¿Â¿Â¿Â¿Â¿Â¿Â¿Â¿Â¿Â¿Â¿Â¿)	
Â¿Â¿Â¿Â¿Â¿Â¿Â¿Â¿Â¿Â¿Â¿	
Â¿Â¿Â¿Â¿Â¿Â¿Â¿Â¿Â¿Â¿Â¿	
Â¿Â¿Â¿Â¿Â¿Â¿Â¿Â¿Â¿Â¿Â¿	
Â¿Â¿Â¿Â¿Â¿Â¿Â¿	
Â¿Â¿Â¿Â¿Â¿Â¿Â¿	
Â¿Â¿Â¿Â¿Â¿Â¿Â¿	

COMPATIBILITY

Â¿Â¿Â¿Â¿Â¿Â¿Â¿Â¿Â¿Â¿Â¿Â¿/Â¿Â¿Â¿Â¿Â¿ XD	
Â¿Â¿Â¿Â¿Â¿Â¿Â¿Â¿Â¿Â¿Â¿Â¿/Â¿Â¿Â¿Â¿Â¿ XD	
Â¿15mmÂ¿	
Â¿15mmÂ¿	
Â¿15mmÂ¿	
Â¿Â¿Â¿Â¿Â¿Â¿Â¿12mmÂ¿	
Â¿Â¿Â¿Â¿Â¿Â¿Â¿12mmÂ¿	
Â¿Â¿Â¿Â¿Â¿Â¿Â¿12mmÂ¿	
Â¿Â¿Â¿Â¿Â¿Â¿Â¿Â¿Â¿Â¿Â¿Â¿Â¿Â¿Â¿Â¿ Â¿Â¿Â¿Â¿Â¿	
Â¿Â¿Â¿Â¿Â¿Â¿Â¿Â¿Â¿Â¿Â¿Â¿Â¿Â¿Â¿Â¿ Â¿Â¿Â¿Â¿Â¿	

Specifications

リム

•Â¿Â¿ : S6000Â¿Â¿Â¿Â¿Â¿Â¿
•Â¿Â¿ : S6000Â¿Â¿Â¿Â¿Â¿Â¿
•Â¿Â¿ : S6000Â¿Â¿Â¿Â¿Â¿Â¿
•Â¿Â¿Â¿Â¿Â¿ : Â¿Â¿Â¿Â¿Â¿
•Â¿Â¿Â¿Â¿Â¿ : Â¿Â¿Â¿Â¿Â¿
•Â¿Â¿Â¿Â¿Â¿ : Â¿Â¿Â¿Â¿Â¿
Â¿Â¿Â¿Â¿Â¿Â¿Â¿Â¿Â¿Â¿Â¿Â¿Â¿
Â¿Â¿Â¿Â¿Â¿Â¿Â¿Â¿Â¿Â¿Â¿Â¿Â¿
Â¿Â¿Â¿Â¿Â¿Â¿Â¿Â¿Â¿Â¿Â¿Â¿Â¿
Â¿Â¿Â¿Â¿Â¿Â¿6.5mm
Â¿Â¿Â¿Â¿Â¿Â¿6.5mm
Â¿Â¿Â¿Â¿Â¿Â¿6.5mm
Â¿Â¿Â¿Â¿UST
Â¿Â¿Â¿Â¿Â¿Â¿Â¿Â¿Â¿Â¿Â¿Â¿Â¿
Â¿Â¿Â¿Â¿UST
Â¿Â¿Â¿Â¿Â¿Â¿Â¿Â¿Â¿Â¿Â¿Â¿Â¿
Â¿Â¿Â¿Â¿UST
Â¿Â¿Â¿Â¿Â¿Â¿Â¿Â¿Â¿Â¿Â¿Â¿Â¿
ETRTO Â¿Â¿Â¿ 27.5"Â¿584x25TSS
ETRTO Â¿Â¿Â¿ 27.5"Â¿584x25TSS
ETRTO Â¿Â¿Â¿ 27.5"Â¿584x25TSS
ETRTO Â¿Â¿Â¿ 29"Â¿622x25TSS
ETRTO Â¿Â¿Â¿ 29"Â¿622x25TSS
ETRTO Â¿Â¿Â¿ 29"Â¿622x25TSS
Â¿Â¿Â¿Â¿Â¿Â¿Â¿
Â¿Â¿Â¿Â¿Â¿Â¿Â¿
Â¿Â¿Â¿Â¿Â¿Â¿Â¿

ホイールハブ

Â¿Â¿Â¿Â¿Â¿Â¿Â¿ Â¿Â¿Â¿Â¿Â¿Â¿Â¿Â¿Â¿Â¿
Â¿Â¿Â¿Â¿Â¿Â¿Â¿ Â¿Â¿Â¿Â¿Â¿Â¿Â¿Â¿Â¿Â¿
Â¿Â¿Â¿Â¿Â¿Â¿Â¿ Â¿Â¿Â¿Â¿Â¿Â¿Â¿Â¿Â¿Â¿
Â¿Â¿Â¿Â¿Â¿Â¿Â¿Â¿Â¿Â¿Â¿Â¿Â¿Â¿
Â¿Â¿Â¿Â¿Â¿Â¿Â¿Â¿Â¿Â¿Â¿Â¿Â¿Â¿
Â¿Â¿Â¿Â¿Â¿Â¿Â¿Â¿Â¿Â¿Â¿Â¿Â¿Â¿
Â¿Â¿Â¿Â¿Â¿Â¿Â¿Â¿Â¿Â¿Â¿Â¿Â¿Â¿Â¿Â¿Â¿Â¿
Â¿Â¿Â¿QRM Â¿Â¿Â¿)Â¿Â¿Â¿Â¿Â¿Â¿Â¿Â¿
Â¿Â¿Â¿Â¿Â¿Â¿Â¿Â¿Â¿Â¿Â¿Â¿Â¿Â¿Â¿Â¿Â¿Â¿
Â¿Â¿Â¿QRM Â¿Â¿Â¿)Â¿Â¿Â¿Â¿Â¿Â¿Â¿Â¿
Â¿Â¿Â¿Â¿Â¿Â¿Â¿Â¿Â¿Â¿Â¿Â¿Â¿Â¿Â¿Â¿Â¿Â¿
Â¿360 Â¿Â¿Â¿Â¿
Â¿Â¿Â¿Â¿Â¿Â¿Â¿Â¿Â¿Â¿Â¿Â¿Â¿Â¿Â¿Â¿Â¿Â¿
Â¿360 Â¿Â¿Â¿Â¿
Â¿Â¿Â¿Â¿Â¿Â¿Â¿Â¿Â¿Â¿Â¿360
QRM Â¿Â¿Â¿

VERSIONS

Â¿Â¿Â¿Â¿Â¿Â¿Â¿Â¿Â¿Â¿
Â¿Â¿Â¿Â¿Â¿Â¿Â¿Â¿Â¿Â¿
Â¿Â¿Â¿Â¿Â¿Â¿Â¿Â¿6Â¿Â¿Â¿Â¿Â¿Â¿
Â¿Â¿Â¿Â¿Â¿Â¿Â¿Â¿6Â¿Â¿Â¿Â¿Â¿Â¿
Â¿Â¿Â¿Â¿Â¿Â¿Â¿Â¿6Â¿Â¿Â¿Â¿Â¿Â¿
Â¿Â¿Â¿Â¿Â¿Â¿Â¿Â¿Â¿Â¿Â¿Â¿Â¿Â¿
110mmÂ¿Â¿Â¿Â¿ 148mmÂ¿Â¿Â¿Â¿Â¿Â¿Â¿Â
¿Â¿Â¿Â¿Â¿Â¿Â¿Â¿Â¿Â¿100mmÂ¿Â¿Â¿Â¿
135/142mmÂ¿

ホイールの重み

884

Downloaded date: 2022-07-07 / Update date: 2022-06-21