2019
FRONT

CROSSMAX

ASTMÂ¿Â¿ Â¿Â¿Â¿Â¿Â¿ 3 : Â¿Â¿Â¿Â¿Â¿Â¿Â¿Â¿Â¿Â¿Â¿Â¿Â¿Â¿Â¿Â¿Â¿
Â¿
150Â¿Â¿Â¿Â¿Â¿Â¿Â¿Â¿Â¿Â¿Â¿Â¿
Â¿Â¿Â¿Â¿Â¿Â¿Â¿Â¿Â¿46mmÂ¿64mm (1.8"Â¿2.5")
Â¿
120Â¿Â¿Â¿Â¿Â¿Â¿Â¿Â¿Â¿Â¿Â¿Â¿

参照ホイール

F81821	Crossmax 29 Ft	F81831	Crossmax 29 Ft Boost

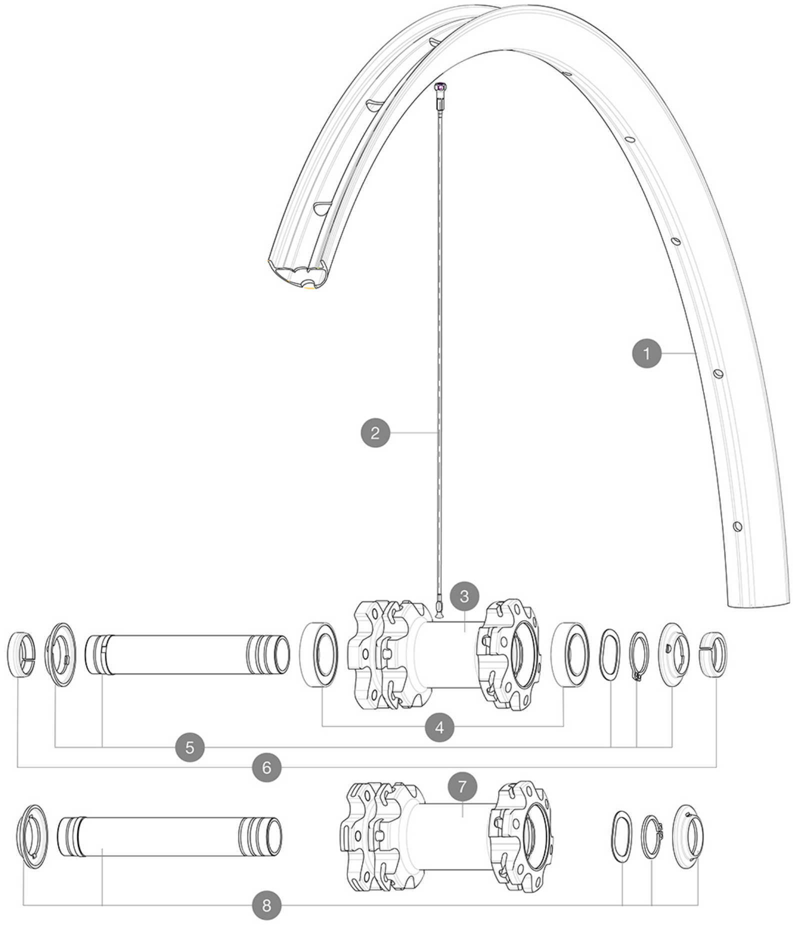

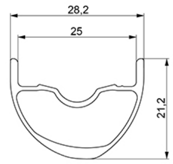

RIMS

 :

1	V3762615	KIT FRT/REAR RIM CROSSMAX 19 29"
	V2700101	UST Tape 28mm for 25 to 27mm wide rims

SPOKES

2	36690301	"12 SPOKES FRONT/OPP DRIVE SIDE CROSSONE 29"" 296mm"

HUB SHELLS

3	N/A	HUB BODY
4	V2500901	KIT BEARINGS 18x30x7 + WAVED WASHER + CLIP
5	V2372301	KIT 100mm AXLE QRM AUTO MTB > 2019
7	N/A	HUB BODY
8	V2372401	KIT 110mm AXLE QRM AUTO MTB > 2019

OPTIONS

	V2374401	TORQUE CAPS 15*31 Adapter MTB QRM Auto > 2019 Frt HUB

ADAPTERS

6	V2372501	15mm MTB Axle Cap QRM Auto From 2019
	99694101	2 REDUCERS 15/9mm

CROSSMAX

付属品

Â¿Â¿Â¿Â¿QRÂ¿Â¿Â¿Â¿Â¿Â¿Â¿Â¿Â¿Â¿Â¿Â¿Â¿Â¿Â¿Â¿)	
Â¿Â¿Â¿Â¿QRÂ¿Â¿Â¿Â¿Â¿Â¿Â¿Â¿Â¿Â¿Â¿Â¿Â¿Â¿Â¿Â¿)	
Â¿Â¿Â¿Â¿QRÂ¿Â¿Â¿Â¿Â¿Â¿Â¿Â¿Â¿Â¿Â¿Â¿Â¿Â¿Â¿Â¿)	
Â¿Â¿Â¿Â¿QRÂ¿Â¿Â¿Â¿Â¿Â¿Â¿Â¿Â¿Â¿Â¿Â¿Â¿Â¿Â¿Â¿)	
Â¿Â¿QRÂ¿Â¿Â¿Â¿Â¿Â¿Â¿Â¿Â¿Â¿Â¿Â¿Â¿Â¿Â¿Â¿)	
Â¿Â¿QRÂ¿Â¿Â¿Â¿Â¿Â¿Â¿Â¿Â¿Â¿Â¿Â¿Â¿Â¿Â¿Â¿)	
Â¿Â¿QRÂ¿Â¿Â¿Â¿Â¿Â¿Â¿Â¿Â¿Â¿Â¿Â¿Â¿Â¿Â¿Â¿)	
Â¿Â¿QRÂ¿Â¿Â¿Â¿Â¿Â¿Â¿Â¿Â¿Â¿Â¿Â¿Â¿Â¿Â¿Â¿)	
Â¿Â¿Â¿Â¿Â¿Â¿Â¿Â¿Â¿Â¿Â¿Â¿	
Â¿Â¿Â¿Â¿Â¿Â¿Â¿Â¿Â¿Â¿Â¿Â¿	
Â¿Â¿Â¿Â¿Â¿Â¿Â¿Â¿Â¿Â¿Â¿Â¿	
Â¿Â¿Â¿Â¿Â¿Â¿Â¿Â¿Â¿Â¿Â¿Â¿	
Â¿Â¿Â¿Â¿Â¿Â¿Â¿	
Â¿Â¿Â¿Â¿Â¿Â¿Â¿	
Â¿Â¿Â¿Â¿Â¿Â¿Â¿	
Â¿Â¿Â¿Â¿Â¿Â¿Â¿	

COMPATIBILITY

Â¿Â¿Â¿Â¿Â¿Â¿Â¿Â¿Â¿Â¿Â¿Â¿/Â¿Â¿Â¿ Â¿Â¿Â¿ XD	
Â¿Â¿Â¿Â¿Â¿Â¿Â¿Â¿Â¿Â¿Â¿Â¿/Â¿Â¿Â¿ Â¿Â¿Â¿ XD	
Â¿15mmÂ¿	
Â¿15mmÂ¿	
Â¿15mmÂ¿	
Â¿15mmÂ¿	
Â¿Â¿Â¿Â¿Â¿Â¿Â¿12mmÂ¿	
Â¿Â¿Â¿Â¿Â¿Â¿Â¿12mmÂ¿	
Â¿Â¿Â¿Â¿Â¿Â¿Â¿12mmÂ¿	
Â¿Â¿Â¿Â¿Â¿Â¿Â¿12mmÂ¿	
Â¿Â¿Â¿Â¿Â¿Â¿Â¿Â¿Â¿Â¿Â¿ Â¿Â¿Â¿Â¿ Â¿Â¿Â¿Â¿Â¿	
Â¿Â¿Â¿Â¿Â¿Â¿Â¿Â¿Â¿Â¿Â¿ Â¿Â¿Â¿Â¿ Â¿Â¿Â¿Â¿Â¿	

Specifications

リム

▪Â¿Â¿ : S6000Â¿Â¿Â¿Â¿Â¿Â¿
▪Â¿Â¿Â¿Â¿Â¿ : Â¿Â¿Â¿Â¿Â¿
Â¿Â¿Â¿Â¿Â¿Â¿Â¿Â¿Â¿Â¿Â¿Â¿Â¿Â¿
Â¿Â¿Â¿Â¿Â¿Â¿6.5mm
Â¿Â¿Â¿Â¿UST

ホイールハブ

Â¿Â¿Â¿Â¿Â¿Â¿Â¿ Â¿Â¿Â¿Â¿Â¿Â¿Â¿Â¿Â¿Â¿
Â¿Â¿Â¿Â¿Â¿Â¿Â¿ Â¿Â¿Â¿Â¿Â¿Â¿Â¿Â¿Â¿Â¿
Â¿Â¿Â¿Â¿Â¿Â¿Â¿ Â¿Â¿Â¿Â¿Â¿Â¿Â¿Â¿Â¿Â¿
Â¿Â¿Â¿Â¿Â¿Â¿Â¿ Â¿Â¿Â¿Â¿Â¿Â¿Â¿Â¿Â¿Â¿
Â¿Â¿Â¿Â¿Â¿Â¿Â¿Â¿Â¿Â¿Â¿Â¿Â¿Â¿Â¿

ホイールの重み

884

Download date: 2024-04-17 / Update date: 2023-09-18