MAVIC CROSSMAX

ASTM CATEGORY 3 : CROSS COUNTRY AND TRAIL RIDING
For a longer longevity of the wheel, Mavic recommends that the total weight supported by the wheels don't exceed 120kg, bike included
For a longer longevity of the wheel, Mavic recommends that the total weight supported by the wheels doesn't exceed 150kg, bike included
Recommended tyre sizes: 46mm to 64mm (1.8" to 2.5")

REFERENCES WHEELS

R24661	Crossmax 29 Rr	R24681	Crossmax 29 Rr Boost
R24671	Crossmax 29 Rr XD	R24691	Crossmax 29 Rr Boost XD

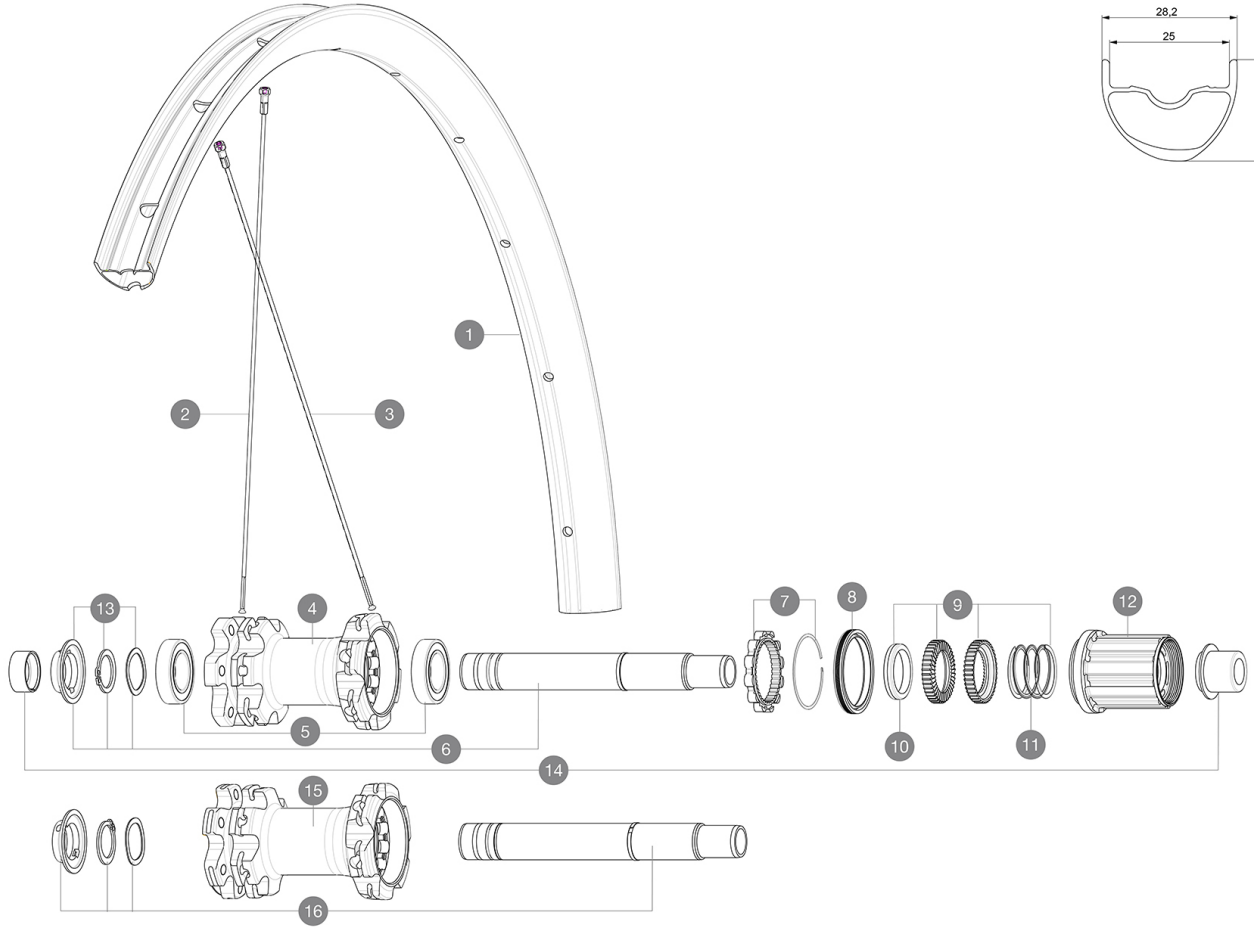

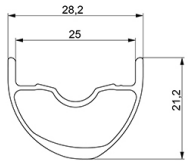

RIMS

 :

1	V3762615	KIT FRT/REAR RIM CROSSMAX 19 29''
	V2700101	UST Tape 28mm for 25 to 27mm wide rims

SPOKES

2	36690301	"KIT 12 FT/NDS XONE/XMAX - XA 29""/AKSIUM DISC 9 + 12 FT/AKS
3	36690401	KIT 12 DS XONE/XRIDE FTSX/AKSIUM DISC 9 SPK 294mm

HUB SHELLS

4	N/A	HUB BODY
5	M40076	HUB BEARINGS 17x30x7 6903 x 2
6	V2372101	KIT ID360 135/142 D6T AXLE WITH CLIP
7	V2252701	KIT ID360 INSERT SHAPED EAR LOBE > 2017
8	V2251601	KIT ID360 SEAL + GREASE
9	V2375201	KIT ID360 24 TEETH 2 RATCHET + MTB SPRING + PAD (specific)
10	V2375401	KIT ID360 MTB 24T 3 NOISE REDUCING PADS
11	V2372901	KIT 3 ID360 MTB SPRINGS
12	V3780101	HG9 Alloy MTB Freewheel Body ID360
12	V3740101	XD MTB Freewheel Body ID360
13	V2373001	KIT ADJUST. SYSTEM QRM AUTO ID360 for 17x30x7 bearing
15	N/A	HUB BODY
16	V2372201	KIT ID360 148 D6T AXLE WITH CLIP

OPTIONS

	V2372801	KIT ID360 2x40 TEETH RATCHETS + MTB SPRING + GREASE + PAD

ADAPTERS

14	V2510701	ID360V2RrAxleAdapt12x142/148
	V2510801	ID360 V2 RrAxleAdapt9x135

Download date: 2024-03-28 / Update date: 2023-09-13

MAVIC CROSSMAX

DELIVERED WITH

Front QR adapters (non-boost wheel)	
Front QR adapters (non-boost wheel)	
Front QR adapters (non-boost wheel)	
Rear QR adapters (non-boost wheel)	
Rear QR adapters (non-boost wheel)	
Rear QR adapters (non-boost wheel)	
Tubeless rim tape	
Tubeless rim tape	
Tubeless rim tape	
User guide	
User guide	
User guide	

COMPATIBILITY

Freewheel: Shimano/Sram or XD	
Freewheel: Shimano/Sram or XD	
Front axle: convertible from 15mm thru axle to Quick Release with adapters (delivered with non-boost wheel)	
Front axle: convertible from 15mm thru axle to Quick Release with adapters (delivered with non-boost wheel)	
Front axle: convertible from 15mm thru axle to Quick Release with adapters (delivered with non-boost wheel)	
Rear axle: 12mm thru axle, convertible to Quick Release with adapters (delivered with non-boost wheel)	
Rear axle: 12mm thru axle, convertible to Quick Release with adapters (delivered with non-boost wheel)	
Rear axle: 12mm thru axle, convertible to Quick Release with adapters (delivered with non-boost wheel)	
Freewheel: Shimano Micro Spline	
Freewheel: Shimano Micro Spline	

Specifications

RIMS

- **Material :** S6000 Aluminum
- **Material :** S6000 Aluminum
- **Material :** S6000 Aluminum
- **Joint :** sleeved
- **Joint :** sleeved
- **Joint :** sleeved
- **Drilling :** traditional
- **Drilling :** traditional
- **Drilling :** traditional
- **Valve hole diameter :** 6.5 mm
- **Valve hole diameter :** 6.5 mm
- **Valve hole diameter :** 6.5 mm
- **Tyre :** UST Tubeless and tubetype
- **Tyre :** UST Tubeless and tubetype
- **Tyre :** UST Tubeless and tubetype
- **ETRTO size 27.5" :** 584x25TSS
- **ETRTO size 27.5" :** 584x25TSS
- **ETRTO size 27.5" :** 584x25TSS
- **ETRTO size 29" :** 622x25TSS
- **ETRTO size 29" :** 622x25TSS
- **ETRTO size 29" :** 622x25TSS

Hookless profile
Hookless profile
Hookless profile

Downloaded: 2023-03-28 / Update date: 2023-09-13

WHEEL HUB

- **Front and rear bodies :** aluminum
- **Front and rear bodies :** aluminum
- **Front and rear bodies :** aluminum
- **Axle material :** aluminum
- **Axle material :** aluminum
- **Axle material :** aluminum

Auto adjust sealed cartridge bearings (QRM Auto), front and rear
Auto adjust sealed cartridge bearings (QRM Auto), front and rear

- **Freewheel :** Instant Drive 360 steel
- **Freewheel :** Instant Drive 360 steel

24 teeth ratchet
Instant Drive 360
QRM Auto

VERSIONS

- **Color :** Black only
- **Color :** Black only
- **Disc standard :** 6 Bolts only
- **Disc standard :** 6 Bolts only
- **Disc standard :** 6 Bolts only
- **Hub width :** Boost (front 110, rear 148) or Non-Boost (front 100, rear 135/142)
- **Hub width :** Boost (front 110, rear 148) or Non-

WHEEL WEIGHTS

1047