Aksium Elite UST Disc

2020
FRONT

ASTMÂ¿Â¿ Â¿Â¿Â¿Â¿Â¿ 2 : Â¿Â¿Â¿+Â¿Â¿Â¿Â¿15Â¿Â¿Â¿Â¿Â¿Â¿Â¿Â¿Â¿Â¿
Â¿
120Â¿Â¿Â¿Â¿Â¿Â¿Â¿Â¿Â¿Â¿Â¿Â¿
Â¿Â¿Â¿Â¿Â¿Â¿Â¿Â¿Â¿25Â¿32mm
Â¿
Â¿Â¿Â¿Â¿Â¿Â¿2Â¿Â¿Â¿Â¿Â¿Â¿Â¿

参照ホイール

F88311	Aks El Evo UST DCL 20 Ft	F88301	Aks El Evo UST D6B 20 Ft

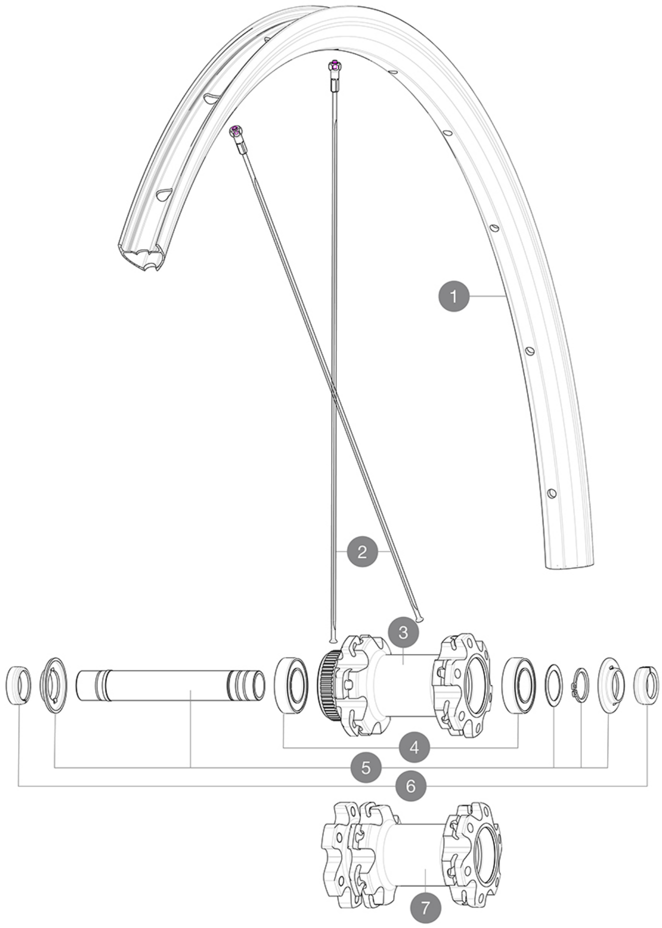

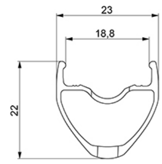

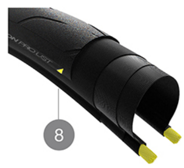

RIMS

 :

1	V4080115	KIT FRONT/REAR RIM AKSIUM ELITE UST DISC 19/20
	V2620101	UST RIM TAPE 25mm (for 21-24mm wide rim)

SPOKES

2	V3664501	KIT 12 FRT/NDS AKSIUM ELITE UST Disc/KSYRIUM UST Disc FLAT S

HUB SHELLS

3	N/A	HUB BODY
4	M40129	KIT 2 BEARINGS 6902 15x28x7
5	V2373301	KIT QRM AUTO FRONT AXLE 12mm > 2019
7	N/A	HUB BODY

ADAPTERS

6	V2680501	12mm Road Axle Cap QRM Auto
	V2680301	"Kit Ft Road Adapter 12 >> 9mm"

Aksium Elite UST Disc

付属品

MAVICÂ¿Â¿Â¿Â¿Â¿Â¿Â¿Â¿ (Â¿Â¿Â¿Â¿Â¿Â¿) (L35546600)	
Â¿Â¿Â¿Â¿Â¿Â¿Â¿Â¿ Â¿Â¿Â¿Â¿	
Â¿Â¿Â¿Â¿ QR Â¿Â¿Â¿Â¿Â¿ (MTBÂ¿996 941 01Â¿Â¿Â¿Â¿Â¿Â¿Â¿Â¿B41 043 01)	
Â¿Â¿Â¿Â¿Â¿Â¿Â¿Â¿Â¿Â¿ 360Â¿Â¿Â¿QRÂ¿Â¿Â¿Â¿Â¿ (LB4989400)	
USTÂ¿Â¿Â¿Â¿Â¿Â¿Â¿Â¿Â¿Â¿ (L12983800)	
Â¿Â¿Â¿Â¿Â¿Â¿Â¿Â¿Â¿Â¿Â¿	
Â¿Â¿Â¿Â¿Â¿Â¿Â¿	

COMPATIBILITY

Â¿Â¿Â¿Â¿Â¿Â¿Â¿Â¿Â¿Â¿Â¿/Â¿Â¿Â¿Â ¿Â¿Â¿Â¿Â¿Â¿Â¿Â¿Â¿Â¿Â¿Â¿Â¿Â¿Â¿ Â¿Â¿Â¿Â¿Â¿Â¿Â¿Â¿Â¿Â¿Â¿XD- RÂ¿Â¿Â¿Â¿Â¿Â¿Â¿Â¿	
Â¿Â¿Â¿Â¿Â¿Â¿Â¿Â¿Â¿12mmx100mmÂ ¿Â¿Â¿Â¿Â¿Â¿Â¿Â¿Â¿Â¿Â¿Â¿Â¿Â¿Â¿ Â¿Â¿Â¿Â¿Â¿Â¿Â¿Â¿Â¿Â¿Â¿Â¿Â¿Â¿Â ¿Â¿Â¿Â¿Â¿Â¿Â¿Â¿Â¿Â¿15mmÂ¿Â¿Â¿ Â¿Â¿Â¿Â¿Â¿Â¿Â¿Â¿Â¿Â¿Â¿Â¿Â¿Â¿	
Â¿Â¿Â¿Â¿Â¿Â¿Â¿12mmÂ¿Â¿Â¿Â¿Â¿Â ¿Â¿Â¿Â¿Â¿Â¿Â¿Â¿Â¿Â¿Â¿Â¿Â¿Â¿Â¿ Â¿Â¿Â¿Â¿Â¿Â¿Â¿Â¿Â¿Â¿Â¿Â¿Â¿Â¿Â ¿	

Specifications

リム

▪Â¿Â¿： S6000Â¿Â¿Â¿Â¿Â¿Â¿
Â¿Â¿Â¿Â¿22mm
▪Â¿Â¿Â¿Â¿Â¿： SUP
Â¿Â¿Â¿Â¿Â¿Â¿Â¿Â¿Â¿Â¿Â¿Â¿Â¿Â¿
Â¿Â¿Â¿Â¿Â¿Â¿Â¿Â¿Â¿Â¿Â¿Â¿
Â¿Â¿Â¿Â¿Â¿Â¿6.5mm
Â¿Â¿Â¿Â¿UST
Â¿Â¿Â¿Â¿Â¿Â¿Â¿Â¿Â¿Â¿Â¿Â¿Â¿Â¿
Â¿Â¿Â¿19mm
ETRTO Â¿Â¿Â¿Â¿622x19TC Â¿Â¿Â¿
Â¿Â¿Â¿Â¿Â¿ Â¿Â¿Â¿Â¿Â¿Â¿Â¿Â¿Â¿Â¿Â¿Â¿

スポーク

Â¿Â¿Â¿Â¿Â¿Â¿Â¿
Â¿Â¿Â¿Â¿Â¿Â¿Â¿Â¿Â¿Â¿Â¿Â¿Â¿Â¿Â¿Â¿Â¿
Â¿Â¿Â¿Â¿Â¿Â¿
Â¿Â¿Â¿Â¿Â¿Â¿Â¿Â¿Â¿Â¿Â¿ABS
Â¿Â¿Â¿Â¿Â¿Â¿Â¿Â¿Â¿Â¿Â¿Â¿Â¿ 24Â¿
Â¿Â¿Â¿Â¿Â¿Â¿Â¿Â¿Â¿Â¿Â¿Â¿Â¿Â¿
2Â¿Â¿Â¿

ホイールハブ

Â¿Â¿Â¿Â¿Â¿Â¿Â¿ Â¿Â¿Â¿Â¿Â¿Â¿Â¿Â¿Â¿Â¿
Â¿Â¿Â¿Â¿Â¿Â¿Â¿Â¿Â¿Â¿Â¿Â¿Â¿
Â¿Â¿Â¿Â¿Â¿Â¿Â¿Â¿Â¿Â¿Â¿Â¿Â¿Â¿Â¿Â¿Â¿
Â¿Â¿Â¿QRM Â¿Â¿Â¿)Â¿Â¿Â¿Â¿Â¿Â¿Â¿Â¿
Â¿Â¿Â¿Â¿Â¿Â¿Â¿Â¿Â¿Â¿Â¿Â¿Â¿Â¿Â¿Â¿Â¿
Â¿360 Â¿Â¿Â¿Â¿
Â¿Â¿Â¿Â¿Â¿Â¿Â¿Â¿Â¿Â¿Â¿Â¿12mmx1
00mmÂ¿Â¿Â¿Â¿Â¿Â¿Â¿Â¿Â¿Â¿Â¿Â¿Â¿Â¿
Â¿
Â¿Â¿Â¿Â¿Â¿Â¿Â¿Â¿Â¿Â¿Â¿Â¿12mmx142mm
Â¿12x135mmÂ¿Â¿Â¿Â¿Â¿Â¿Â¿Â¿Â¿

VERSIONS

Â¿Â¿Â¿Â¿Â¿Â¿Â¿Â¿Â¿Â¿
Â¿Â¿Â¿Â¿Â¿Â¿Â¿Â¿6Â¿Â¿Â¿Â¿Â¿Â¿Â¿Â¿Â
¿Â¿Â¿Â¿Â¿Â¿Â¿RÂ¿

ホイールの重み

825

Download date: 2025-01-15 / Update date: 2022-04-06