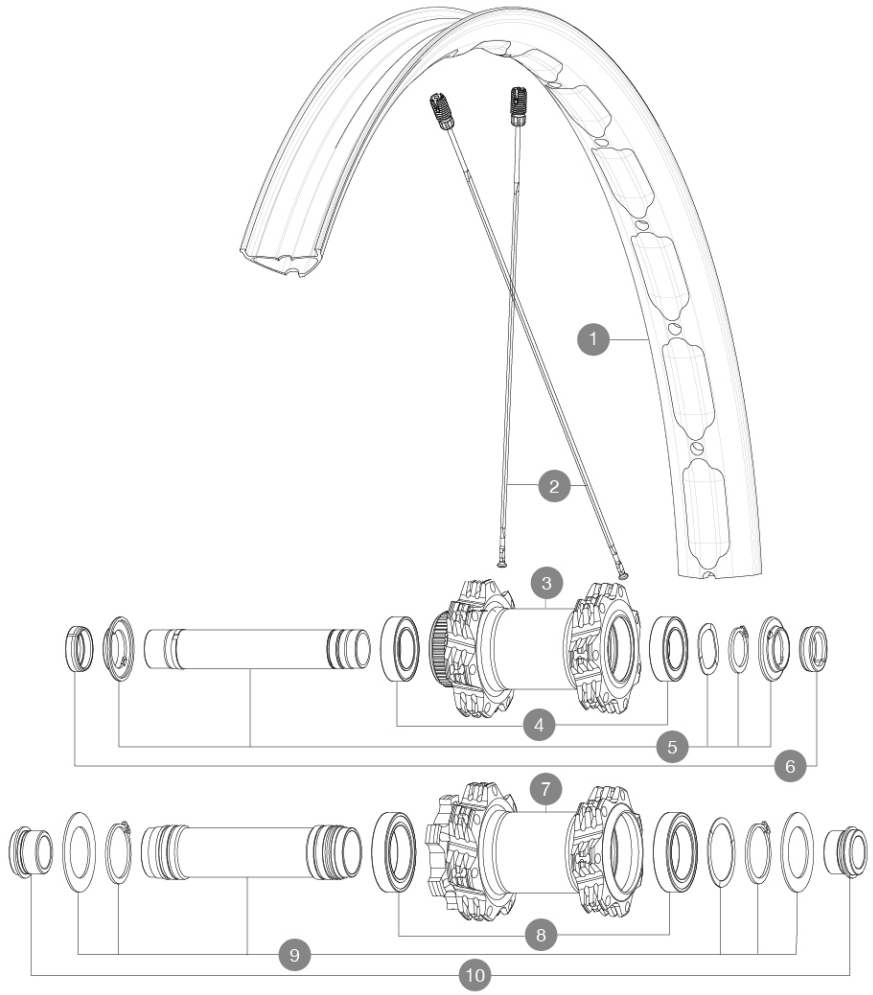
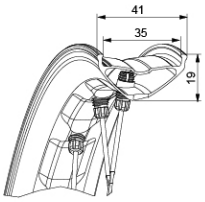
MAVIC E-DEEMAX S 35 27.5

ASTM CATEGORY 5 : GRAVITY RIDING FOCUSED ON THE DESCENT
Maximum tyre pressure: 2.55bar/37PSI with a 54mm tyre - 1.3bar/19PSI with a 125mm tyre
Recommended tyre sizes: 65mm to 81mm (2.5" to 3.2")
Maximum tyre size: width 64mm - pressure max. 1.3Bar/19PSI
For a longer longevity of the wheel, Mavic recommends that the total weight supported by the wheels doesn't exceed 180kg, E-bike included
For a longer longevity of the wheel, Mavic recommends that the total weight supported by the wheels doesn't exceed 180kg, Ebike included

REFERENCES WHEELS

F91583	E-DEEMAX S35 INT 27,5 BST	F91593	E-DEEMAX S35 CL 27,5 BST





RIMS



 :

1	V3766515	Kit Front/Rear rim eDeemax S 27,5

SPOKES

2	V2388801	Kit 14Ft eDeemaxS 27,5'' btd spk287 M7/7

HUB SHELLS

3	N/A	HUB BODY
4	V2500901	KIT BEARINGS 18x30x7 + WAVED WASHER + CLIP
5	V2375601	Kit 110mm axle QRM auto MTB from 2019 DCL
7	N/A	HUB BODY
8	M40179	FRONT BEARING 25x37x7 20mm AXLE
9	V2373701	KIT 20x110mm BOOST AXLE QRM AUTO MTB > 2019

OPTIONS

	V2650401	TORQUECAP20*31 FT QRM AUTO MTB
	V2374401	TORQUE CAPS 15*31 Adapter MTB QRM Auto > 2019 Frt HUB

ADAPTERS

6	V2372501	KIT FT MTB FORKREST FROM 2019
10	12982801	ADAPTER Ft 20 to 15mm
	V2680401	20x110 BOOST Front Adapter MTB wheels
	99694101	ADAPTER Ft 15 to 9mm QR

Download date: 2024-03-29 / Update date: 2024-02-15

MAVIC E-DEEMAX S 35 27.5

DELIVERED WITH

UST valve and accessories (129 838 01)	
UST valve and accessories (129 838 01)	
UST valve and accessories (129 838 01)	
Multifonction adjustment wrench (delivered with rear wheel) (325 423 01)	
Multifonction adjustment wrench (delivered with rear wheel) (325 423 01)	
Multifonction adjustment wrench (delivered with rear wheel) (325 423 01)	
User guide	
2 replacement spokes with each wheel	
2 replacement spokes with each wheel	
Fore adjustment wrench	
Fore adjustment wrench	
2 replacement spokes with each wheel	

COMPATIBILITY

Front axle: 15x110 Boost, convertible to 20x110 Boost thru axle with adapters	
Front axle: 15x110 Boost, convertible to 20x110 Boost thru axle with adapters	
Rear axle adapters: 12x148 convertible to 9x141 (kit V2510801 sold separetly)	
Rear axle: 12x148 Boost thru axle	
INT 6-bolt disc version front wheel convertible to 20x110 Boost thru axle with optional adapters	
Freewheel: Shimano HG9, XD or Micro Spline	
Freewheel: Shimano HG9, XD or Micro Spline	
Rear axle: 12x148 Boost thru axle	
Rear axle: Quick Release only	
Front axle: convertible from 15mm thru axle to Quick Release with adapters (delivered with non-boost wheel)	
Front axle: for fixing nuts only (included), M9x1 thread	

Specifications

RIMS

- **Material :** Maxtal
- **Material :** Maxtal
- **Material :** Maxtal
- **Material :** S6000 Aluminum
- **Material :** S6000 Aluminum
- **Height :** 22 mm

SUP

SUP

- **Internal width :** 35 mm
- **Weight reduction :** ISM
- **Weight reduction :** ISM

E-Bike specific rim profile

E-Bike specific rim profile

- **Drilling :** Fore tapeless tubeless technology (front/rear 28 holes)
- **Tire :** UST Tubeless and tubetype
- **Tire :** UST Tubeless and tubetype

Disc brake specific profile

- **Internal width :** 35 mm
- **Internal width :** 35 mm

Asymmetrical rim design

- **ETRTO size 27.5" :** 584x35TC
- **ETRTO size 27.5" :** 584x35TC
- **ETRTO size 27.5" :** 584x35TC

WHEEL HUB

- **Body :** aluminum

Instant Drive 360

QRM Auto

Hub available with 6-bolt or center lock (R) brake rotors

- **Axles :** Front 15X110 Boost ; Rear 12X148 Boost
- **Disc standard :** 6 Bolts or Center LockÂ®
- **Axle material :** aluminum
- **Rear body :** aluminum
- **Axles :** Front 15X110 (Boost) or 15x100 ; Rear 12X148 (Boost) or 12x142
- **Freewheel :** Shimano HG MTB / Shimano MS / Sram XD MTB
- **Freewheel :** FTS-L steel

Hub available with 6-bolt or center lock (R) brake rotors

- **Axles :** Front 15X110 Boost ; Rear 12X148 Boost

24 teeth ratchet

Instant Drive 360

QRM Auto

VERSIONS

- **Disc standard :** 6 Bolts or Center Lock (R)
- **Disc standard :** 6 Bolts or Center Lock (R)
- **Hub width :** Boost only (front 110, rear 148)

WHEEL WEIGHTS

940

Downloaded on 2024-02-15 from https://www.mavic.com/en-us/update: 2024-02-15