2021
FRONT

# E-DEEMAX S 30 29

ASTMÂ¿Â¿ Â¿Â¿Â¿Â¿Â¿ 5 : Â¿Â¿Â¿Â¿Â¿Â¿Â¿Â¿Â¿Â¿Â¿Â¿Â¿Â¿Â¿Â¿
ã□□ã□¤ã□¼ã□«ã□□é□·æ□□ã□¡ã□□ã□□ã□□ã□□ã□□Eã□□ã□¤ã□¯ã
□□å□«ã□□ã□□ã□¤ã□¼ã□«ã□«ã□□ã□□ã□□ç·□é□□é□□ã□□180ã□-
ã□ä»¥á□ ã□¨ã□□ã□□ã□□ã□¨ã□□æ□¨å¥¨
Â¿Â¿Â¿Â¿Â¿Â¿Â¿Â¿Â¿60mmÂ¿76mm (2.35"Â¿3.0")
Maximum tyre pressure: 2.95bar/43PSI with a 52mm tyre - 1.55bar/22PSI with a 125mm tyre
æ□□å°□ã□¿ã□¤ã□¤ã□µã□¤ã□ºï¼□å' 52mm-
æ□□å¤§ç©ºæ°□å□§2.95Bar/43PSI
For a longer longevity of the wheel, Mavic recommends that the total weight supported by the wheels doesn't exceed 180kg, Ebike included

## 参照ホイール

| | | | |
|---|---|---|---|
| F91623 | E-DEEMAX S 30 INT 29 BST | F91633 | E-DEEMAX S 30 CL 29 BST |

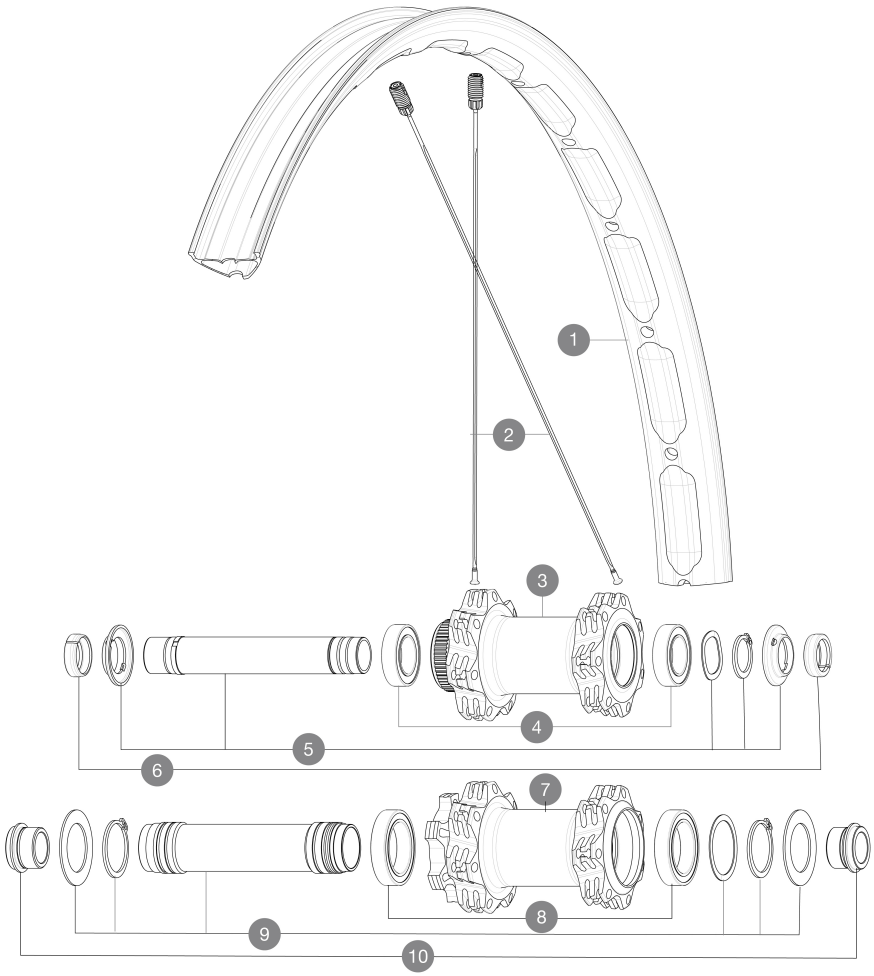


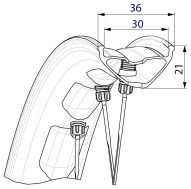


## RIMS

 :

| | | |
|---|---|---|
| 1 | V3766415 | Kit Front/Rear rim eDeemax S 29 |
| | V3750101 | 35mm UST Green Tape for 30mm wide rims |

## SPOKES

| | | |
|---|---|---|
| 2 | V2388501 | Kit 14 Front eDeemax S 29" butted spoke 306 M7/7 |

## HUB SHELLS

| | | |
|---|---|---|
| 3 | N/A | HUB BODY |
| 4 | V2500901 | KIT BEARINGS 18x30x7 + WAVED WASHER + CLIP |
| 5 | V2375601 | Kit 110mm axle QRM auto MTB from 2019 DCL |
| 7 | N/A | HUB BODY |
| 8 | M40179 | FRONT BEARING 25x37x7 20mm AXLE |
| 9 | V2373701 | KIT 20x110mm BOOST AXLE QRM AUTO MTB > 2019 |

## OPTIONS

| | | |
|---|---|---|
| | V2650401 | TORQUECAP20*31 FT QRM AUTO MTB |
| | V2374401 | TORQUE CAPS 15*31 Adapter MTB QRM Auto > 2019 Frt HUB |

## ADAPTERS

| | | |
|---|---|---|
| 6 | V2372501 | 15mm MTB Axle Cap QRM Auto From 2019 |
| 10 | 12982801 | 15mm ADAPTER KIT - 2012 WHEELS |
| | V2680401 | 20x110 BOOST Front Adapter MTB wheels |
| | 99694101 | 2 REDUCERS 15/9mm |

Download date: 2024-05-18 / Update date: 2024-02-15

# MAVIC E-DEEMAX S 30 29

## 付属品

| | |
|---|---|
| Â¿Â¿Â¿Â¿Â¿Â¿Â¿Â¿Â¿Â¿Â¿Â¿Â¿2 Â¿Â¿Â¿ | |
| USTÂ¿Â¿Â¿Â¿Â¿Â¿Â¿Â¿Â¿Â¿ (129 838 01) | |
| USTÂ¿Â¿Â¿Â¿Â¿Â¿Â¿Â¿Â¿Â¿ (129 838 01) | |
| USTÂ¿Â¿Â¿Â¿Â¿Â¿Â¿Â¿Â¿Â¿ (129 838 01) | |
| USTÂ¿Â¿Â¿Â¿Â¿Â¿Â¿Â¿Â¿Â¿ (129 838 01) | |
| Â¿Â¿Â¿Â¿Â¿Â¿Â¿Â¿Â¿Â¿Â¿Â¿Â¿Â¿Â¿Â¿Â¿Â¿Â¿Â¿Â¿ (325 423 01) | |
| Â¿Â¿Â¿Â¿Â¿Â¿Â¿Â¿Â¿Â¿Â¿Â¿Â¿Â¿Â¿Â¿Â¿Â¿Â¿Â¿Â¿ (325 423 01) | |
| Â¿Â¿Â¿Â¿Â¿Â¿Â¿Â¿Â¿Â¿Â¿Â¿Â¿Â¿Â¿Â¿Â¿Â¿Â¿Â¿Â¿ (325 423 01) | |
| Â¿Â¿Â¿Â¿Â¿Â¿Â¿Â¿Â¿Â¿Â¿Â¿Â¿Â¿Â¿Â¿Â¿Â¿Â¿Â¿Â¿ (325 423 01) | |
| ã□¦ã□¼ã□¶ã□¼ã□¬ã□¤ã□□ | |
| Â¿Â¿Â¿Â¿Â¿Â¿Â¿Â¿Â¿Â¿Â¿Â¿Â¿Â¿Â¿2 Â¿Â¿Â¿ | |
| Â¿Â¿Â¿Â¿Â¿Â¿Â¿Â¿Â¿Â¿Â¿Â¿Â¿Â¿Â¿2 Â¿Â¿Â¿ | |
| Â¿Â¿Â¿Â¿Â¿Â¿Â¿Â¿Â¿Â¿Â¿Â¿Â¿Â¿Â¿2 Â¿Â¿Â¿ | |
| FOREÂ¿Â¿Â¿Â¿Â¿ | |
| FOREÂ¿Â¿Â¿Â¿Â¿ | |

## COMPATIBILITY

| | |
|---|---|
| Â¿Â¿Â¿Â¿Â¿Â¿Â¿Â¿Â¿Â¿Â¿ HG9Â¿Â¿Â¿XD Â¿Â¿Â¿ Micro Spline | |
| ã□□ã□ã□³ã□□ã□¢ã□¯ã□¹ã□«ï¼□ 15x110mm ã□□ã□¼ã□¹ã□□ã□□ä» □å±□ã□®ã□¢ã□□ã□□ã□¿ã□¼ã□ □ä½¿ã□□20X110mm ã□□ã□¼ã□¹ã □□ã□¹ã□«ã□¼ã□¢ã□¯ã□¹ã□«ã□« çµ□ã□¿æ□¿ã□□ã□□å□¯è□½ | |
| ã□□ã□ã□³ã□□ã□¢ã□¯ã□¹ã□«ï¼□ 15x110mm ã□□ã□¼ã□¹ã□□ã□□ä» □å±□ã□®ã□¢ã□□ã□□ã□¿ã□¼ã□ □ä½¿ã□□20X110mm ã□□ã□¼ã□¹ã □□ã□¹ã□«ã□¼ã□¢ã□¯ã□¹ã□«ã□« çµ□ã□¿æ□¿ã□□ã□□å□¯è□½ | |
| Â¿Â¿Â¿Â¿Â¿Â¿Â¿12x148mm Â¿Â¿Â¿Â¿ Â¿Â¿Â¿Â¿Â¿Â¿Â¿ | |
| ã□□ã□ã□³ã□□ã□¢ã□¯ã□¹ã□«ï¼□ 15x110mm ã□□ã□¼ã□¹ã□□ã□□ä» □å±□ã□®ã□¢ã□□ã□□ã□¿ã□¼ã□ □ä½¿ã□□20X110mm ã□□ã□¼ã□¹ã □□ã□¹ã□«ã□¼ã□¢ã□¯ã□¹ã□«ã□« çµ□ã□¿æ□¿ã□□ã□□å□¯è□½ | |
| ã□ªã□¢ã□¢ã□¯ã□¹ã□«ã□¢ã□□ã□ □ã□¿ã□¼ï¼□ 12x148ã□□9x141ã□« å¤□æ□□ï¼□ã□- ã□□ã□□V2510801ã□¯å□¥å£²ï¼□ | |
| Â¿Â¿Â¿Â¿Â¿Â¿Â¿Â¿Â¿Â¿Â¿ HG9Â¿Â¿Â¿XD Â¿Â¿Â¿ Micro Spline | |
| Â¿Â¿Â¿Â¿Â¿Â¿Â¿Â¿Â¿Â¿Â¿ HG9Â¿Â¿Â¿XD Â¿Â¿Â¿ Micro Spline | |
| Â¿Â¿Â¿Â¿Â¿Â¿Â¿12x148mm Â¿Â¿Â¿Â¿ Â¿Â¿Â¿Â¿Â¿Â¿Â¿ | |
| Â¿Â¿Â¿Â¿Â¿Â¿Â¿12x148mm Â¿Â¿Â¿Â¿ Â¿Â¿Â¿Â¿Â¿Â¿Â¿ | |
| INT 6ç©´ã□□ã□«ã□□ã□□ã□£ã□¹ã □¯ã»□æ§□ã□®ã□□ã□ã□³ã□□ã□ □ã□¤ã□¼ã□«ã□¯ã□□ã□ªã□□ã□· ã□§ã□³ã□®ã□¢ã□□ã□□ã□¿ã□¼ã □□ä½¿ã□□20X110mm ã□□ã□¼ã□¹ ã□□ã□¹ã□«ã□¼ã□¢ã□¯ã□¹ | |
| ã□□ã□ã□³ã□□ã□¢ã□¯ã□¹ã□«ï¼□ ã□¢ã□□ã□□ã□¿ã□¼ã□§15mmã□¹ ã□«ã□¼ã□¢ã□¯ã□¹ã□«ã□□ã□□ã □¯ã□¤ã□□ã□¯ã□ªã□ªã□¼ã□¹ã□¸ã □®çµ□ã□¿æ□¿ã□□ã□□å□¯è□½ | |
| ã□□ã□ã□³ã□□ ã□¢ã□¯ã□¹ã□«ï¼ □å□ºå®□ç□¨ã□□ã□□ã□□ã□®ã□ ¿ï¼□å□«ã□□ï¼□ã□□M9x1ã□¹ã□¬ ã□□ã□□ | |

## Specifications

### リム

- Â¿Â¿ : Â¿Â¿Â¿Â¿Â¿

### ホイールハブ

ã□□ã□□ã□£ç´ æ□□ï¼□ã□¢ã□«ã□□ã□

### ホイールの重み

960

Downloaded date: 2024-05-18 / Update date: 2024-02-1