2022
REAR

CROSSMAX XL R 29

ASTMè¦□æ ¼ ã□«ã□□ã□´ã□ªã□¼ 4 : ã□¨ã□³ã□□ã□¥ã□¼ã□-ï¼□ã□□ã□¬ã□¤ã□«ã□©ã□¤ã□□ã□□ã□¤ã□¼ã□«ã□□é□·æ□□ã□¡ã□□ã□□ã□□ã□□è□ªè»¢è»□ã□□á□«ã□□ã□□ã□¤ã□¼ã□«ã□«ã□□ã□□ã□□ç·□é□□é□□ã□□150ã□ã□-ä»¥å□ ã□¨ã□□ã□□ã□□ã□¨ã□□æ□¨å¥¨æ□¨å¥¨ã□¿ã□¤ã□¤ã□µã□¤ã□ºï¼□50mmï½□76mm (2.0"ï½□3.0")
Maximum tyre pressure: 2.35bar/34PSI with a 52mm tyre - 1.25bar/18PSI with a 125mm tyre
æ□□å°□ã□¿ã□¤ã□¤ã□µã□¤ã□ºï¼□å¹ 52mm-æ□□å¤§ç©ºæ°□å□§2.35Bar/34PSI

参照ホイール

R41161	CROSSMAX XL R INT 29 BST HG	R41181	CROSSMAX XL R CL 29 BST MS
R41171	CROSSMAX XL R INT 29 BST XD		

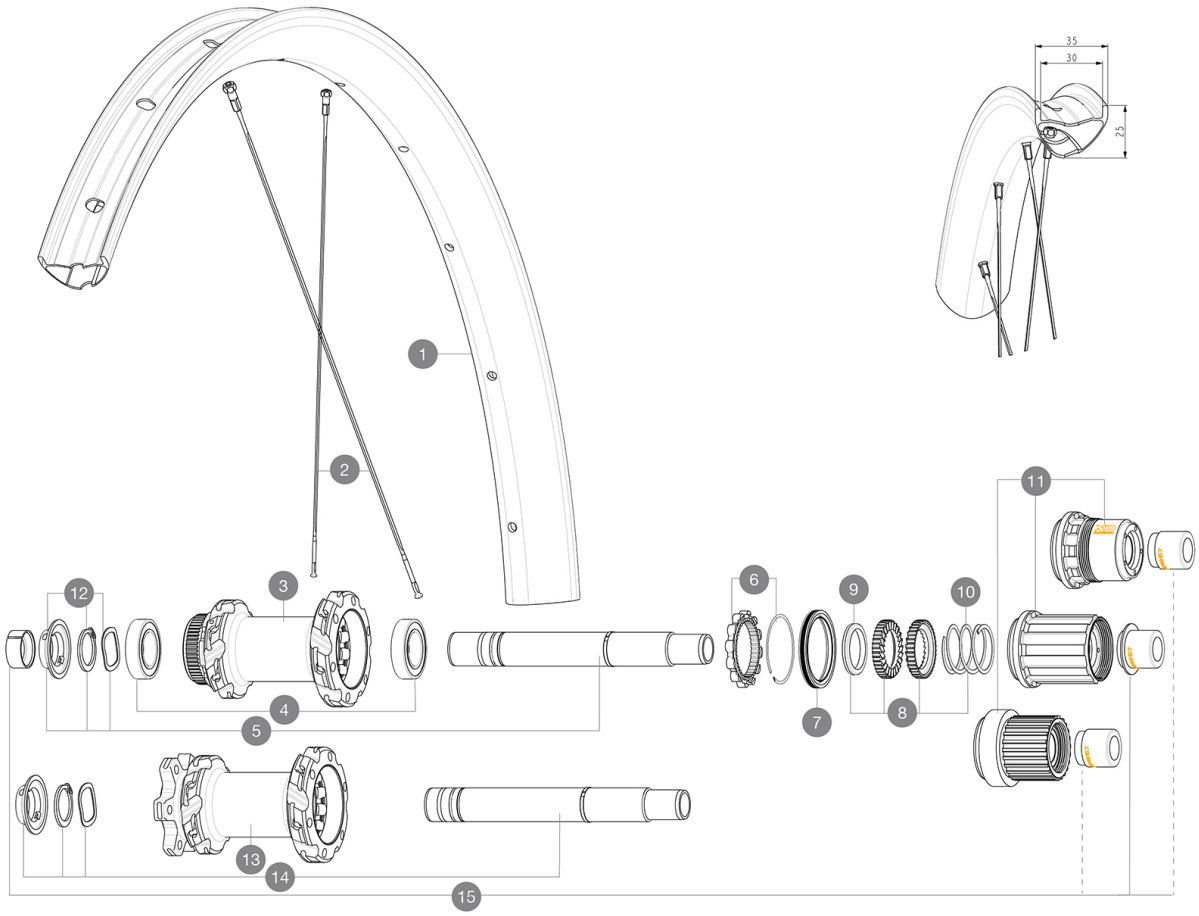

RIMS

 :

1	V00004931	Kit Front/Rear rim Crossmax XLR 29"
	V3750101	35mm UST Green Tape for 30mm wide rims

SPOKES

2	V00065231	Kit 12 Front/Rear Crossmax SL Ultimate 29" butted stainless
2	V2389101	Kit 12Fr/Rr XmaxSL Ultimate spk293+np&w while stock last

HUB SHELLS

3	N/A	HUB BODY
4	M40076	HUB BEARINGS 17x30x7 6903 x 2
5	V2375701	Kit ID360 148 DCL axle with circlip
6	V2252701	KIT ID360 INSERT SHAPED EAR LOBE > 2017
7	V00063631	Kit ID360 seal version 2 (larger)
8	V2375201	KIT ID360 24 TEETH 2 RATCHET + MTB SPRING + PAD (specific)
9	V2375401	KIT ID360 MTB 24T 3 NOISE REDUCING PADS
10	V2372901	KIT 3 ID360 MTB SPRINGS
11	V3780101	HG9 Alloy MTB Freewheel Body ID360
11	V3740101	XD MTB Freewheel Body ID360
11	V3990101	MicroSpline MTB Freewheel Body ID360
12	V2373001	KIT ADJUST. SYSTEM QRM AUTO ID360 for 17x30x7 bearing
13	N/A	HUB BODY
14	V2372201	KIT ID360 148 D6T AXLE WITH CLIP

OPTIONS

8	V2372801	KIT ID360 2x40 TEETH RATCHETS + MTB SPRING + GREASE + PAD

ADAPTERS

15	V2510701	ID360 EVO REAR AXLE ADAPTERS 12x142mm DCL & D6T
	V2510801	ID360 EVO REAR AXLE ADAPTERS 9x135mm DCL & D6T

Download date: 2024-05-06 / Update date: 2024-04-10

MAVIC CROSSMAX XL R 29

付属品

å□□ã□□ã□¤ã□¼ã□«ã□«ãº¤æ□□ç□¨ã□¹â□□ã□¼ã□¯ã□□2æ□¬ä»□å±□	
USTã□□ã□«ã□□ï¼□ã□¢ã□¯ã□»ã□µã□ªã□¼ (129 838 01)	
USTã□□ã□«ã□□ï¼□ã□¢ã□¯ã□»ã□µã□ªã□¼ (129 838 01)	
USTã□□ã□«ã□□ï¼□ã□¢ã□¯ã□»ã□µã□ªã□¼ (129 838 01)	
ã□□ã□¥ã□¼ã□□ã□¬ã□¹ã□ªã□ ã□□ã□¼ã□□è£ ç□□æ¸□ã□¿	
ã□□ã□¥ã□¼ã□□ã□¬ã□¹ã□ªã□ ã□□ã□¼ã□□è£ ç□□æ¸□ã□¿	
ã□□ã□¥ã□¼ã□□ã□¬ã□¹ã□ªã□ ã□□ã□¼ã□□è£ ç□□æ¸□ã□¿	
å¤□æ©□è□½êª¿æ□´ã□¬ã□³ã□□ï¼□ã□ªã□¢ã□□ã□¤ã□¼ã□«ã□«ä»□å±□ï¼□ (325 423 01)	
å¤□æ©□è□½êª¿æ□´ã□¬ã□³ã□□ï¼□ã□ªã□¢ã□□ã□¤ã□¼ã□«ã□«ä»□å±□ï¼□ (325 423 01)	
ã□¦ã□¼ã□¶ã□¼ã□¬ã□¤ã□□	
å□□ã□□ã□¤ã□¼ã□«ã□«ãº¤æ□□ç□¨ã□¹â□□ã□¼ã□¯ã□□2æ□¬ä»□å±□	
å□□ã□□ã□¤ã□¼ã□«ã□«ãº¤æ□□ç□¨ã□¹â□□ã□¼ã□¯ã□□2æ□¬ä»□å±□	

COMPATIBILITY

ã□□ã□ã□³ã□□ã□¢ã□¯ã□¹ã□«ï¼□15x110mm ã□□ã□¼ã□¹ã□□ã□¹ã□«ã□¼ã□¢ã□¯ã□¹ã□«	
ã□ªã□¢ã□¢ã□¯ã□¹ã□«ï¼□12x148mm ã□□ã□¼ã□¹ã□□ã□¹ã□«ã□¼ã□¢ã□¯ã□¹ã□«	
ã□□ã□ã□³ã□□ã□¢ã□¯ã□¹ã□«ï¼□15x110mm ã□□ã□¼ã□¹ã□□ã□¹ã□«ã□¼ã□¢ã□¯ã□¹ã□«	
ã□□ã□ªã□¼ã□□ã□¤ã□¼ã□«æ□¬ä½□ï¼□ã□³ã□³ã□□ã□¼ã□□ã□□ã□«ã□·ã□□ã□□HG MTBã□¹ã□□ã□¼ã□«ï¼□ã□-ã□□ã□□V3790101å□¥å£²ï¼□	
ã□ªã□¢ã□¢ã□¯ã□¹ã□«ã□¢ã□□ã□□ã□¿ã□¼ï¼□ 12x148ã□□9x141ã□«å¤□æ□□ï¼□ã□-ã□□ã□□V2510801ã□¯å□¥å£²ï¼□	
ã□ªã□¢ã□¢ã□¯ã□¹ã□«ï¼□12x148mm ã□□ã□¼ã□¹ã□□ã□¹ã□«ã□¼ã□¢ã□¯ã□¹ã□«	
ã□□ã□ã□³ã□□ã□¢ã□¯ã□¹ã□«ï¼□15x110mm ã□□ã□¼ã□¹ã□□ã□¹ã□«ã□¼ã□¢ã□¯ã□¹ã□«	
ã□□ã□¼ã□¹ã□□ã□¢ã□¯ã□¹ã□«ï¼□15X110mmã□□12X148mm	
ã□□ã□¼ã□¹ã□□ã□¢ã□¯ã□¹ã□«ï¼□15X110mmã□□12X148mm	
ã□¤ã□³ã□¹ã□¿ã□³ã□□ã□□ã□©ã□¤ã□□360ã□□ã□ªã□¼ã□□ã□¤ã□¼ã□« ã□□ã□¯ã□□ã□ã□¸ã□¼ã□□ã□□ã□□9Â°ã□®å□□ã□¿å□□ã□□ã□□ã□§ç□¬æ□□ã□®å□ é□□ã□□å□¯è□½ã□«ã□□ã□□æ□°é□□ç□ºã□®è¶è»½é□□ã□□ã□¤ã□³ã□¹ã□¿ã□³ã□□ã□□ã□©ã□¤ã□□360 ã□□ã□ªã□¼ã□□ã□¤ã□¼ã□«ã□□é□□æ□¥è§¦å¼□ã□®å¤§å□□ã□©ã□□ã□¼ã□·ã□¼ã□«ã□§æ□©æ□¦ã□□æ□□ã□□ã□□å¤□å½©ã□«æ□□ã□£ã□□ã□¨ã□³ã□□ã□-ã□£ã□□ã□□ã□□å¹ åº□ã□□æ±□ç□¨æ□§ã□□å®□ç□¾	
ã□□ã□ã□³ã□□ ã□¢ã□¯ã□¹ã□«ï¼□å□ºå®□ç□¨ã□□ã□□ã□□ã□®ã□¿ï¼□å□«ã□□ï¼□ã□□M9x1ã□¹ã□¬ã□□ã□□	

Specifications

リム

▪ç´ æ□□ : UDÂ²ä»□ä¸□ã□□ã□®å¤□å±¤ã□□ã□□ã□□ã□□ã□«ã□¼ã□□ã□³ã□□ã□¡ã□¤ã□□ã□¼100ï¼
▪ç´ æ□□ : UDÂ²ä»□ä¸□ã□□ã□®å¤□å±¤ã□□ã□□ã□□ã□□ã□«ã□¼ã□□ã□³ã□□ã□¡ã□¤ã□□ã□¼100ï¼
▪ç´ æ□□ : UDÂ²ä»□ä¸□ã□□ã□®å¤□å±¤ã□□ã□□ã□□ã□□ã□«ã□¼ã□□ã□³ã□□ã□¡ã□¤ã□□ã□¼100ï¼
ã□□ã□ªã□ªã□³ã□°ï¼□ã□□ã□©ã□□ã□£ã□¸ã□§ã□□ã□«å¹ ï¼□30 mm
ETRTO ã□µã□¤ã□º 29"ï¼□622x30TSS

ホイールハブ

ã□□ã□□ã□£ç´ æ□□ï¼□ã□¢ã□«ã□□ã□□ã□¡ã□
ã□¤ã□³ã□□ã□£ã□□ã□□ã□£ ã□□ã□□ã□□ã□£ã□□ã□¶ã□¤ã□³ï¼□INFINITY æ¨□æº□ã□□ã□£ã□¹ã□¯ï¼□6ç©´ã□¼ã□□ã□¯ã□»ã□³ã□¿ã□¼ã□-ã□□ã□¯Â®ã□®ã□¿ã□□ã□□ã□¯6ç©´ã□□ã□«ã□□ã□¾ã□□ã□¯ã□»ã□³ã□¿ã□¼ã□ã□ã□¯ã□□ã□¬ã□¼ã□ã□ã□¼ã□¿ã□¼ã□«å¯¾å¿□ã□¢ã□¯ã□¹ã□«æ□□è³ªï¼□ã□¢ã□«ã□□ã□□ã□¡ã□ã□¢ã□¯ã□¹ã□«ã□µã□¤ã□ºï¼□ã□□ã□-

ホイールの重み

860

Downloaded: 2024-05-06 / Update date: 2024-04-1